TM 11-677

DEPARTMENT OF THE ARMY TECHNICAL MANUAL

BOOK #G

DIRECTION FINDER SET AN/PRD-1

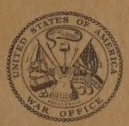

DEPARTMENT OF THE ARMY • OCTOBER 1955

WARNING

DANGEROUS VOLTAGES EXIST IN DYNAMOTOR-POWER SUPPLY DY–79/PRD–1

TECHNICAL MANUAL
No. 11-677

DEPARTMENT OF THE ARMY
WASHINGTON 25, D. C., *7 October 1955*

DIRECTION FINDER SET AN/PRD-1

	Paragraph	Page
CHAPTER 1. INTRODUCTION		
Section I. General	1, 2	3
II. Application	3–6	3
III. Description and data	7–19	6
CHAPTER 2. INSTALLATION		
Section I. Service upon receipt of Direction Finder Set AN/PRD-1	20, 21	15
II. Installation procedure	22–34	17
CHAPTER 3. OPERATION		
Section I. Controls and instuments	35–38	25
II. Operation under usual conditions	39–46	26
III. Operation under unusual conditions	47–50	30
CHAPTER 4. ORGANIZATIONAL MAINTENANCE		
Section I. Tools and equipment	51–53	32
II. Preventive maintenance services	54–58	33
III. Lubrication and weatherproofing	59–62	36
IV. Troubleshooting at organizational maintenance level	63–67	37
CHAPTER 5. THEORY		
Section I. Theory of Radio Receiver R-395/PRD-1	68, 69	42
II. Stage-by-stage analysis of Radio Receiver R-395/PRD-1	70–83	43
III. Switching and control circuits of Radio Receiver R-395/PRD-1	84–91	54
IV. Theory of power supply units	92, 93	60
CHAPTER 6. TROUBLESHOOTING AT FIELD MAINTENANCE LEVEL		
Section I. Troubleshooting procedures	94–98	62
II. Checking power supply circuits for shorts	99–101	64
III. Operational tests	102, 103	66, 67
IV. Troubleshooting charts	104–106	67
V. Troubleshooting tests	107–114	91
VI. Repairs at field maintenance level	115–120	95
VII. Mechanical replacement and adjustment of subassemblies	121–125	97
VIII. Lubrication and refinishing	126–128	101
IX. Direction Finder Set Support MT-1283/PRD-1	129–131	102
CHAPTER 7. ALINEMENT PROCEDURES		
Section I. Test equipment required for alinement	132–134	105
II. Alinement	135–144	105
CHAPTER 8. FINAL TESTING		
Section I. General procedure	145–149	114
II. Power supply performance tests	150, 151	115
III. Performance tests without loop antenna	152–159	115
IV. Performance tests with loop antenna	160–163	118
CHAPTER 9. SHIPMENT AND LIMITED STORAGE AND DEMOLITION TO PREVENT ENEMY USE		
Section I. Shipment and limited storage	164–166	122
II. Demolition of materiel to prevent enemy use	167, 168	123
INDEX		129

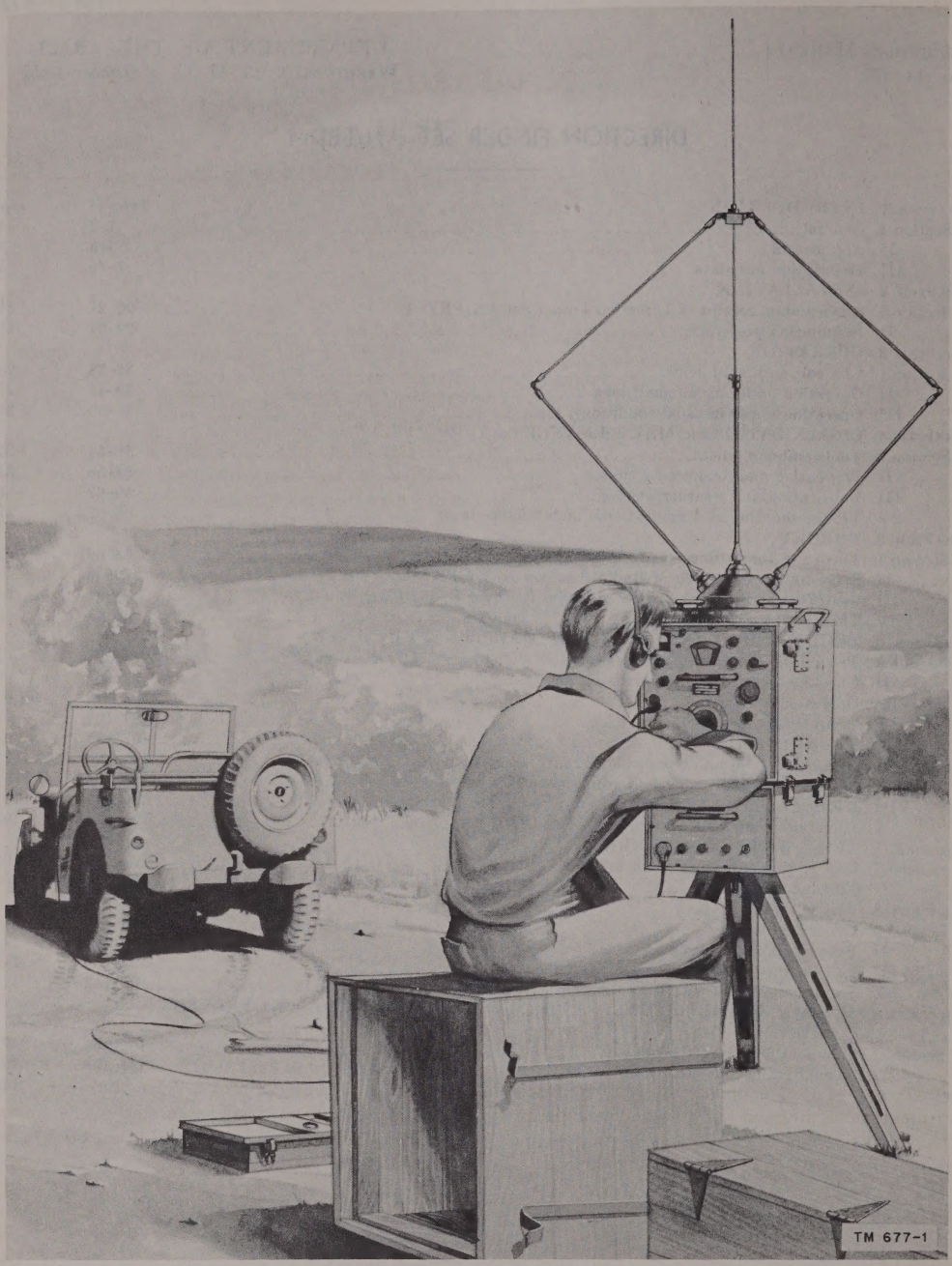

Figure 1. Direction Finder Set AN/PRD–1 in use.

CHAPTER 1
INTRODUCTION

Section I. GENERAL

1. Scope

a. This manual contains the basic principles of operation and a description of Direction Finder Set AN/PRD–1 (fig. 1). The theory of operation of the equipment is also given together with instructions for troubleshooting the equipment at field maintenance levels, and the procedure to follow when making repairs. Information is also given for alinement procedures and final testing of the equipment after repairs have been made.

b. Forward comments on this publication direct to Commanding Officer, The Signal Corps Publications Agency, Fort Monmouth, N. J., ATTN: Standards Division.

2. Forms and Records

The following forms will be used for reporting unsatisfactory conditions of Army materiel and equipment and when performing preventive maintenance:

a. DD Form 6, Report of Damaged or Improper Shipment, will be filled out and forwarded as prescribed in SR 745–45–5 (Army); Navy Shipping Guide, Article 1850–4 (Navy); and AFR 71–4 (Air Force).

b. DA Form 468, Unsatisfactory Equipment Report, will be filled out and forwarded to the Office of the Chief Signal Officer as prescribed in SR 700–45–5.

c. DD Form 535, Unsatisfactory Report, will be filled out and forwarded to Commanding General, Air Materiel Command, Wright-Patterson Air Force Base, Dayton, Ohio, as prescribed in SR 700–45–5 and AF TO 00–35D–54.

d. DA Form 11–238, Operator First Echelon Maintenance Checklist for Signal Corps Equipment (Radio Communication, Direction Finding, Carrier, Radar), will be prepared in accordance with instructions on the back of the form (fig. 30).

e. DA Form 11–239, Second and Third Echelon Maintenance Checklist for Signal Corps Equipment (Radio Communication, Direction Finding, Carrier, Radar), will be prepared in accordance with instructions on the back of the form (fig. 31).

f. Use other forms and records as authorized.

Section II. APPLICATION

3. Purpose and Use

a. Direction Finder Set AN/PRD–1 is designed for use as a mobile and portable radio direction finder. The equipment covers a frequency range of 100 kilocycles (kc) to 30 megacycles (mc) in seven overlapping bands. The set is capable of receiving continuous wave (cw), interrupted continuous wave (icw), and amplitude-modulated (am) signals throughout the frequency range, and of receiving frequency-modulated (fm) signals only in the range from 12.5 to 30 mc.

b. The major parts of the equipment (fig. 2) are Antenna AS–536/PRD–1, Antenna AT–301/PRD–1, Radio Receiver R–395/PRD–1, Dynamotor-Power Supply DY–79/PRD–1, Battery Box CY–947/PRD–1, Direction Finder Tripod MT–870/PRD–1. A number of additional components are listed in paragraph 9. General descriptions of the major components of the equipment are given in paragraphs 11 through 16.

4. Application of Equipment

a. Direction Finder Set AN/PRD–1 is used to determine the direction of arrival of transmitted radio signals from friendly or enemy sources. With the antenna oriented and the receiver in operation, the direction can be easily determined by using the null method of determination.

b. The functioning of the equipment is shown by the simplified block diagram (fig. 3). The radio-frequency (rf) signal is picked up by Antenna AS–536/PRD–1 (Antenna AT–301/PRD–1

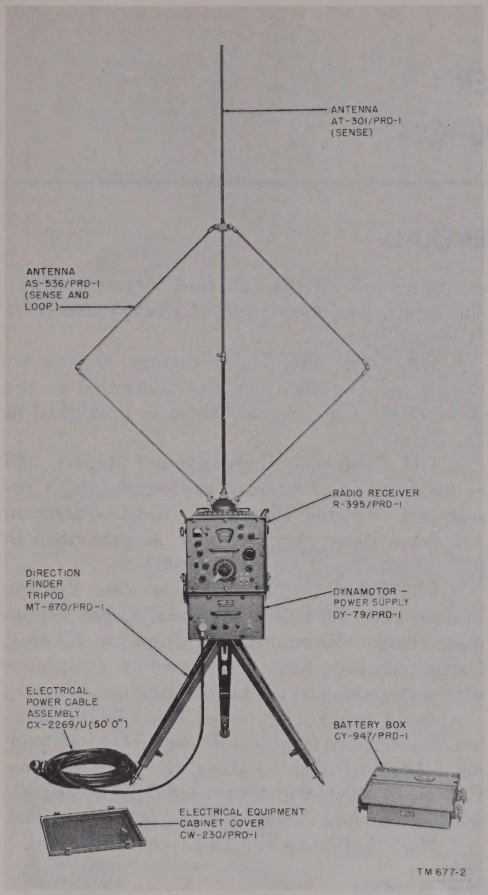

Figure 2. Direction Finder Set AN/PRD–1, major components.

is used only on band 7) and is fed into Radio Receiver R–395/PRD–1. The receiver provides an audible response which is heard by means of a headset or a visual response seen on the front panel meter. Power for the receiver is supplied by either Dynamotor-Power Supply DY–79/PRD–1 or Battery Box CY–947/PRD–1.

5. Determination of Direction

a. Direction Finder Set AN/PRD–1 is a loop-type direction finder. The directional properties of the loop are such that maximum pickup (peak) is obtained when the plane of the loop is in the direction of arrival of the signal, and minimum

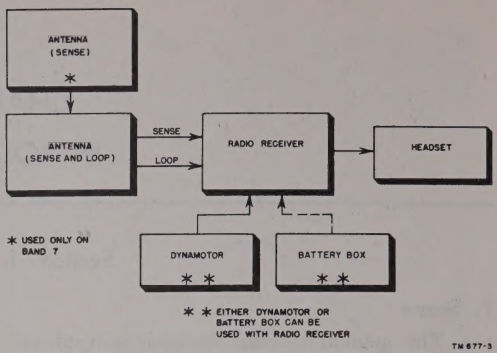

Figure 3. Direction Finder Set AN/PRD–1, simplified block diagram.

pickup (null) is obtained when the plane of the loop is perpendicular to the path of the signal. The antenna pattern is in the form of a *figure 8* as shown in A, figure 4.

b. The azimuth of a signal is determined by rotating the loop about its vertical axis until a null (min.) signal is observed in the receiver output. Because the loop has two null positions, both of which indicate the same line of direction of signal arrival, it is not possible to determine whether the signal is coming from the front of or from the rear of the direction finder. This 180° ambiguity in determining the direction of signal arrival is resolved by using a vertical *sense* antenna in conjunction with the loop antenna.

c. The pattern of the *sense* antenna is circular (B, fig. 4). When the voltage from the sense antenna is combined in the proper phase relationship with the voltage from the loop antenna, a cardioid pattern results (C, fig. 4). This pattern has but one null and one maximum which are related in position to the nulls and maximums of the loop pattern as shown. The cardioid null lies to the right of one null and to the left of the other null of the *figure 8* pattern. By manipulating the loop and sense antennas while operating the equipment and observing the position of the cardioid null with respect to the loop nulls, it is possible to resolve the 180° bearing ambiguity of the loop and determine whether the signal is arriving from the front or the rear of the set.

6. Bearing Accuracy

a. The skill of the operator is largely responsible for the degree of accuracy with which the null position can be determined when receiving weak signals. On some types of signals, the null

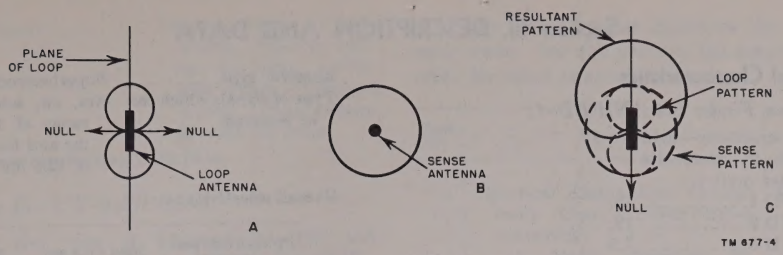

Figure 4. Antenna radiation patterns.

position may be most easily determined by aural means, and on others, by visual observation of meter readings. Simultaneous use of both aural and visual indications may result in obtaining the best bearings. Careful adjustment of the SENSITIVITY, AUDIO VOLUME, and BFO PITCH controls should give satisfactory results.

b. On all signals, turn the SENSITIVITY control to the extreme clockwise (but not the AVC) position because this setting gives sharper bearings. Set the AUDIO VOLUME control so that the decrease in signal toward the null is clearly discernible. When receiving voice or icw signals, use the BFO PITCH control (normally in the OFF position) to increase the bearing accuracy. On weak signals, rotate the antenna from side to side of the null, and select the middle of the null as the bearing position.

c. To check the accuracy of azimuth scale readings, rotate the antenna assembly approximately 180° from the initial reading and take another bearing. If this second bearing is not 180° removed from the first bearing, average the two bearings for greater accuracy. This check is particularly necessary as frequencies above 20 mc.

d. Any unbalance in the loop antenna input circuit will result in broad nulls (A, fig. 5). Any inaccuracy in the components of the sense amplifier will also result in a poor cardioid pattern. If the gain is too high, the resulting pattern will resemble that shown in B; if the gain is too low, the pattern will resemble C. In either case, the ratio *a* to *b* (B and C, fig. 5) is decreased and it is more difficult to obtain proper sense indication.

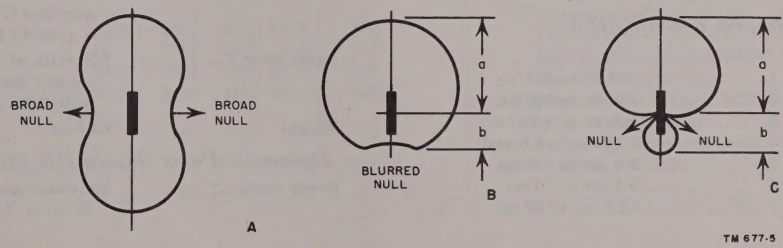

Figure 5. Antenna patterns showing effect of inaccuracies of adjustments.

7. Technical Characteristics

a. Direction Finder Set AN/PRD–1.

Overall sensitivity—field strength in microvolts per meter (uv/m):

BAND 1	18.
BAND 2	12.
BAND 3	7.5.
BAND 4	6.
BAND 5	6.
BAND 6	6.
BAND 7	7.
Bearing accuracy	±1°.
Weight (complete equipment).	295 lb.

b. Antenna AS–536/PRD–1.

Loop section	Steel, copper and silver plated rod construction; diamond-shaped, fold-up type. Each arm 3 feet long.
Sense section	Stainless steel rod and tube construction (center rod portion of antenna).
Weight	5.5 lb.

c. Antenna AT–301/PRD–1.

Sense	Stainless steel, copper, and silver plated rod 3 ft long. Used to extend sense antenna portion of Antenna AS–536/PRD–1 for band 7 only.
Weight	0.39 lb.

d. Radio Receiver R–395/PRD–1.

Frequency range:

Band 1	100 kc to 225 kc.
Band 2	220 kc to 520 kc.
Band 3	500 kc to 1,200 kc.
Band 4	1.14 mc to 2.6 mc.
Band 5	2.5 mc to 5.8 mc.
Band 6	5.5 mc to 13 mc.
Band 7	12.5 mc to 30 mc.

Receiver type	Superheterodyne.
Type of signals which can be received.	Am, cw, and icw in the range of 100 kc to 30 mc and fm in the range of 12.5 mc to 30 mc.

Overall selectivity:

Db down from peak response	Band 4 (1.8 mc)	Band 2 (370 kc)
6	2–4 kc	4–6 kc.
20	4–6.5 kc	7–10 kc.
40	6–9 kc	10–15 kc.
60	7–12 kc	12–20 kc.
80	8–16 kc	16–25 kc.

Audio frequency response	Within ±6 db (decibels) of response at 1,000 cycles over range 400 to 3,500 cycles.
Fm bandwidth	34 kc.
Method of calibration	Built-in crystal frequency calibrator.
Dial calibration accuracy	0.3%.
Calibration points	100-kc intervals on bands 1, 2, and 3. 1,300 kc intervals on bands 4 and 5. 4,000 kc intervals on bands 6 and 7.
Number of tubes	15.
Power supply	Dynamotor-Power Supply DY–79/PRD–1 or Battery Box CY–947/PRD–1 (*e* and *f* below).
Audio output	5.5 volts at 1,000 cycles; output jack terminated with 600 ohms.
Weight	63.5 lb.

e. Dynamotor-Power Supply DY–79/PRD–1.

Power input	Vehicular storage battery, 24 volts, 7 amperes.

Power output	Filament voltage 1.3 volts ±10%. Filament voltage 6.0 volts ±10%. Bias voltage −6.0 volts ±10%. Plate voltage 87 volts ±3 volts.
Weight, less bias battery	15.75 lb.

f. Battery Box CY–947/PRD–1.

Number and type of batteries.	2 Batteries BA–419/U, and 5 Batteries BA–404/U.
Weight, less batteries	12 lb.

g. Direction Finder Tripod MT–870/PRD–1.

Length	Adjustable from 28½ inches to 36½ inches.
Weight	11.5 lb.

8. Packaging Data

a. When packaged for export shipment, the components of Direction Finder Set AN/PRD–1 are placed in moisture-vaporproof containers and are packed in four wooden export crates. A view of the method of packing is shown in figure 16. The size, weight, and volume of each crate are indicated in the following chart:

Note. Items may be packaged in a manner different from that shown, depending on supply channel.

Crate No.	Height (in.)	Width (in.)	Depth (in.)	Volume (cu ft)	Unit weight (lb)
1/4	30 7/16	36¾	25½	16. 5	231
2/4	15	49¾	21½	9. 4	125
3/4	24¾	30¾	24¼	10. 5	163
4/4	31½	30⅝	18¼	10	124
Total weight (lb)					643

b. The following list indicates the contents of each crate. See the packing list attached to each crate for exact contents.

Crate No.	Contents	Notes
1	Electrical Standardized Components Case CY–949/PRD–1 containing: 1 Radio Receiver R–395/PRD–1 housed in Electrical Equipment Cabinet CY–946/PRD–1 with Electrical Equipment Cabinet Cover CW–230/PRD–1. 1 Battery Box CY–947/PRD–1. 1 Headset, Navy Type CW–49507, and Cord CD–307. 1 test cord (W3). 1 compass, fitting, and case. 1 set of running spares. 2 technical manuals for operation of Direction Finder Set AN/PRD–1.	See figure 10.
2	Electrical Standardized Components Case CY–950/PRD–1 containing: 1 Antenna AS–536/PRD–1. 1 Antenna AT–301/PRD–1. 1 Direction Finder Tripod MT–870/PRD–1.	See figure 7.
3	Electrical Standardized Components Case CY–954/PRD–1 containing: 1 Dynamotor-Power Supply DY–79/PRD–1, housed in Electrical Equipment Cabinet CY–948/PRD–1. 2 power cords (W1 and W2). 1 set of running spares.	See figure 11.
4	Jeep mounting brackets and fender reinforcements.	See figures 24 and 25.

9. Table of Components

Component	Required No.	Height (in.)	Depth (in.)	Length (in.)	Volume (cu. ft.)	Unit weight (lb.)
Antenna AS–536/PRD–1 (collapsed)	1	40½	4 wide	1½ thick	0. 141	5.5.
Antenna AT–301/PRD–1	1	36	½ dia		. 005	0.38.
Radio Receiver R–395/PRD–1 housed in Electrical Equipment Cabinet CY–946/PRD–1 with Electrical Equipment Cabinet Cover CW–230/PRD–1.	1	18⅝	12 29/32	13¼	1. 84	63.5.
Dynamotor-Power Supply DY–79/PRD–1 housed in Electrical Equipment Cabinet CY–948/PRD–1 (less bias battery).	1	10	16 29/32	14	1. 37	15.75.
Battery Box CY–947/PRD–1 (less batteries).	1	3 13/32	14 5/32	11 15/16	. 33	12.
Electrical Power Cable Assembly CX–2269/U (W1).	1	½ dia		50 ft	. 87	12.
Electrical Power Cable Assembly CX–2269/U (W2).	1	½ dia		8 ft	. 136	2.
Test cord (W3) (stock No. 3E4020.2)	1	½ dia		5 ft	. 087	0.40.
Direction Finder Tripod MT–870/PRD–1	1	29 5/16	6	6	. 61	11.5.
Headset CW–49507	1					0.75.
Cord CD–307	1					0.50.
Surveyor's Magnetic Compass MX–1454/U (in leather case).	1	1¾	5½	5½	. 03	1.90.
Electrical Standardized Components Case CY–949/PRD–1.	1	25⅛	21¾	29⅛	10. 9	75 (empty) 133¼ (packed).
Electrical Standardized Components Case CY–950/PRD–1.	1	9⅜	16¾	43¾	3. 95	47 (empty) 65 (packed).
Electrical Standardized Components Case CY–954/PRD–1.	1	20	20½	23⅛	5. 5	49 (empty) 96 (packed).
Direction Finder Set Support MT–1283/PRD–1.	1	21	12	22	3. 22	65.

10. Nomenclature Assignments

A list of common names for the components of Direction Finder Set AN/PRD–1 is given below.

Nomenclature	Common name	Fig. No.
Antenna AS–536/PRD–1	Loop and sense antenna.	2
Antenna AT–301/PRD–1 (used only on band 7).	Sense antenna extension.	2
Radio Receiver R–395/PRD–1.	Receiver	8
Dynamotor-Power Supply DY–79/PRD–1.	Dynamotor-power supply.	17
Battery Box CY–947/PRD–1.	Battery box	12
Electrical Equipment Cabinet CY–946/PRD–1.	Receiver cabinet	8, 9
Electrical Equipment Cabinet CY–948/PRD–1.	Dynamotor cabinet	18
Electrical Equipment Cabinet Cover CW–230/PRD–1.	Receiver cabinet front cover.	9
Electrical Standardized Components Case CY–949/PRD–1 (receiver, battery box, and auxiliary parts).	Receiver carrying case.	10
Electrical Standardized Components Case CY–950/PRD–1 (loop antenna, sense antenna and tripod).	Antenna carrying case.	7
Electrical Standardized Components Case CY–954/PRD–1 (dynamotor and auxiliary parts).	Dynamotor carrying case.	11
Direction Finder Tripod MT–870/PRD–1.	Tripod	13
Electrical Power Cable Assembly CX–2269/U.	Power cord (W1)	23
Electrical Power Cable Assembly CX–2269/U.	Power cord (W2)	23
Test cord, stock No. 3E4020.2.	Test cord (W3)	23
Headset CW–49507 and Cord CD–307.	Headset and cord	14
Surveyor's Magnetic Compass MX–1454/U.	Compass	15
Direction Finder Set Support MT–1283/PRD–1.	Jeep mount	24, 25

11. Antenna AS–536/PRD–1

a. Antenna AS–536/PRD–1 (fig. 6) is a combined loop antenna and sense antenna. It is designed to operate throughout the frequency range of 100 kc to 30 mc. The arms of the loop antenna are fabricated of steel tubes, copper and silver plated, and are hinged at the top and corners so that the unit can be collapsed and folded for packing. The vertical center portion of the unit is the sense antenna. It is made of a stainless steel rod and tube, so constructed that it may be telescoped for assembly and disassembly.

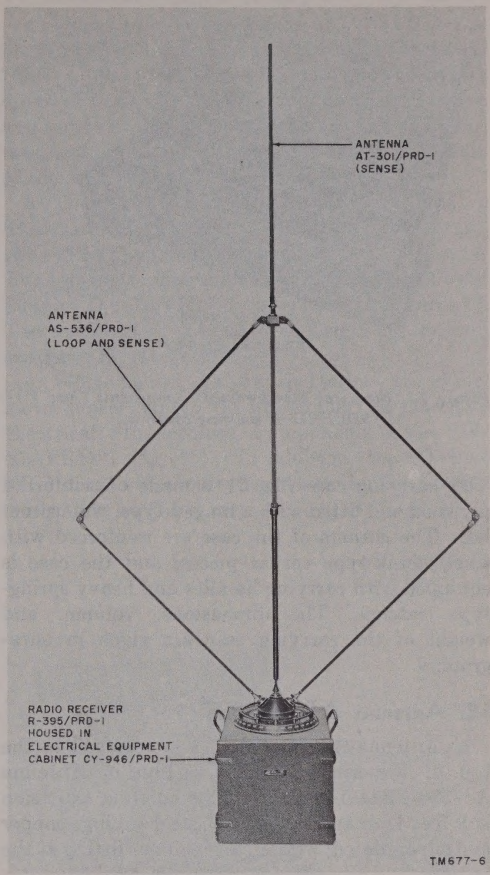

Figure 6. Antenna AS–536/PRD–1 and Antenna AT–301/PRD–1.

b. When in use, the complete assembly is attached to the rotary antenna mount located on the top of Electrical Equipment Cabinet CY–946/PRD–1. The dimensions, volume, and weight of the unit are given in paragraph 9.

c. When packed for transportation, Antenna AS–536/PRD–1, along with Antenna AT–301/PRD–1 (par. 12) and Direction Finder Tripod MT–870/PRD–1 (par. 16*b*), is placed in Electrical Standardized Components Case CY–950/PRD–1.

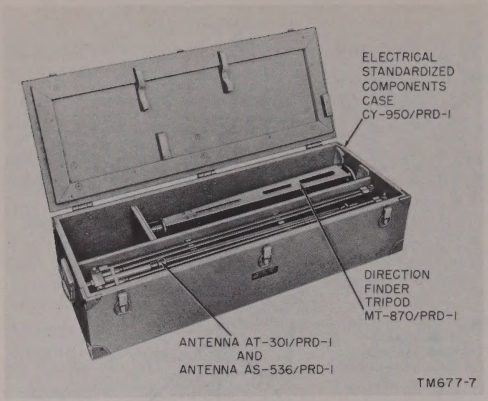

Figure 7. Electrical Standardized Components Case CY–950/PRD–1, showing contents.

This carrying case (fig. 7) is made of reinforced plywood and fitted with a hinged-type, waterproof lid. The corners of the case are reinforced with steel, trunk-type corner pieces; and the case is equipped with carrying handles and heavy spring-type catches. The dimensions, volume, and weight of the carrying case are given in paragraph 9.

12. Antenna AT–301/PRD–1

a. Antenna AT–301/PRD–1 is attached to the top of the sense antenna section of Antenna AS–536/PRD–1 (fig. 6). This antenna extension is 3 feet long and is made of steel tubing, copper and silver plated, with an attachment fitting at the bottom.

b. Antenna AT–391/PRD–1 is used only when the receiver is operated on BAND 7. Remove it for operation on all other bands of the receiver. Dimensions, volume, and weight of the unit are given in paragraph 9.

13. Radio Receiver R–395/PRD–1

a. Radio Receiver R–395/PRD–1 (fig. 8), is a 15-tube, superheterodyne type that operates in seven overlapping bands over a frequency range of 100 kc to 30 mc (par. 7). The unit is designed to receive am, cw, and icw signals throughout the total frequency range, and to receive fm signals in the frequency range of 12.5 mc to 30 mc. The panel of the receiver is provided with a handle for removing the unit from the cabinet. The schematic diagram of the reciver is shown in figure 84.

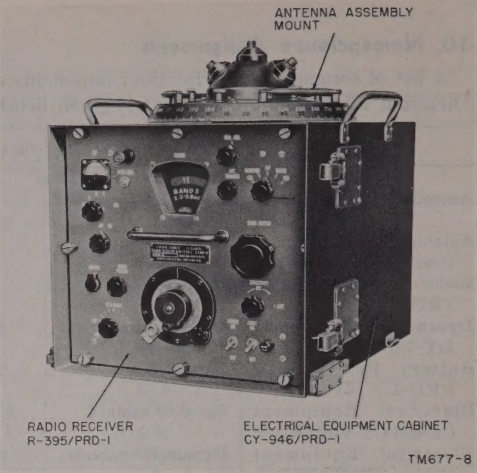

Figure 8. Radio Receiver R–395/PRD–1 housed in cabinet, cover removed.

Dimensions, volume, and weight of the unit are given in paragraph 9.

b. The front panel of the receiver contains the controls, switches, and indicating devices needed for operation of the set.

c. Radio Receiver R–395/PRD–1 is housed in Electrical Equipment Cabinet CY–946/PRD–1 which is provided with Electrical Equipment Cabinet Cover CW–230/PRD–1 (fig. 9). This

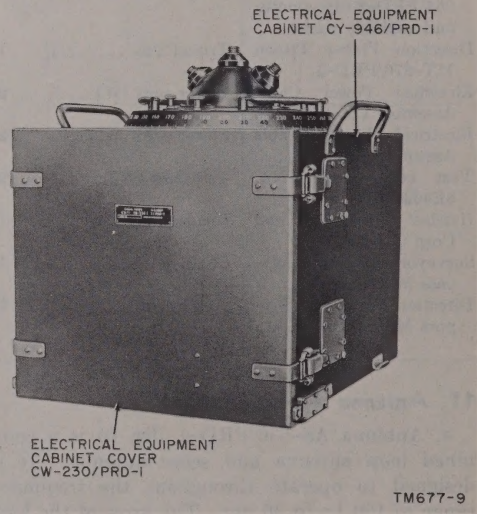

Figure 9. Radio Receiver R–395/PRD–1 housed in cabinet, cover closed.

front cover is fitted with a rubber gasket and is held in place by four spring-type clamps to protect the receiver from the weather.

d. The antenna assembly mount is located on the top of Electrical Equipment Cabinet CY–946/PRD–1 (fig. 8). This is a two-piece rotary mounting that consists of an antenna mount and an azimuth scale disk (fig. 20). It is provided with slip rings and brushes (on the underside) for making electrical connections between the antenna mount and the antenna jack. The azimuth scale disk portion of the mount has two azimuth scales graduated in 1° intervals from 0° to 360°. A turning handle is provided to facilitate rotation of the azimuth scale and antenna assembly mount.

e. When packed for transportation, Radio Receiver R–395/PRD–1 (in Electrical Equipment Cabinet CY–946/PRD–1) and Battery Box CY–947/PRD–1 are placed in Electrical Standardized Components Case CY–949/PRD–1 (fig. 10). The dimensions, volume, and weight of this case are given in paragraph 9. In addition, the case provides carrying space for the headset and cord, the test cord, the compass, the spare parts, and the two manuals.

14. Dynamotor-Power Supply DY–79/PRD–1

a. Dynamotor-Power Supply DY–79/PRD–1 is housed in Electrical Equipment Cabinet CY–948/PRD–1 (fig. 17). The dynamotor-power supply operates from a 24-volt vehicular storage battery and supplies all the direct-current (dc) filament, bias, and plate voltages required for the operation of the radio receiver.

b. The dynamotor-power supply contains, a dynamotor, two-lamp ballast units, a bias battery, two series regulator tubes, and one control tube. The schematic diagram of the Dynamotor-Power Supply DY–79/PRD–1 is shown in figure 83. The dimensions, volume, and weight of the unit are given in paragraph 9.

c. When packed for transportation, the dynamotor-power supply (in its cabinet) is placed in Electrical Standardized Components Case CY–954/PRD–1 (fig. 11). In addition, the CY–954/PRD–1 provides carrying space for the power cords and running spares.

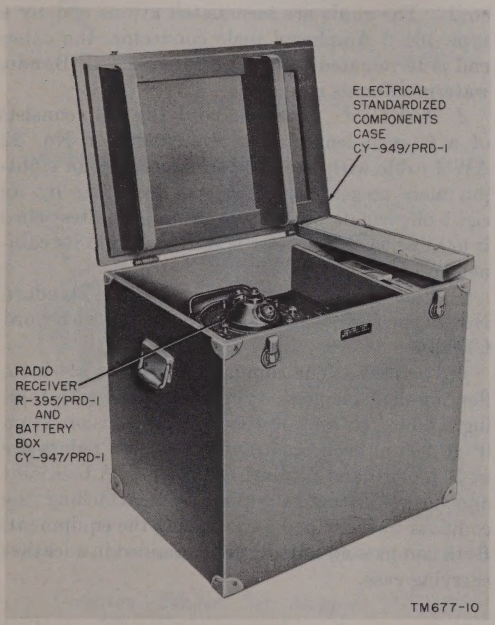

Figure 10. Electrical Standardized Components Case CY–949/PRD–1.

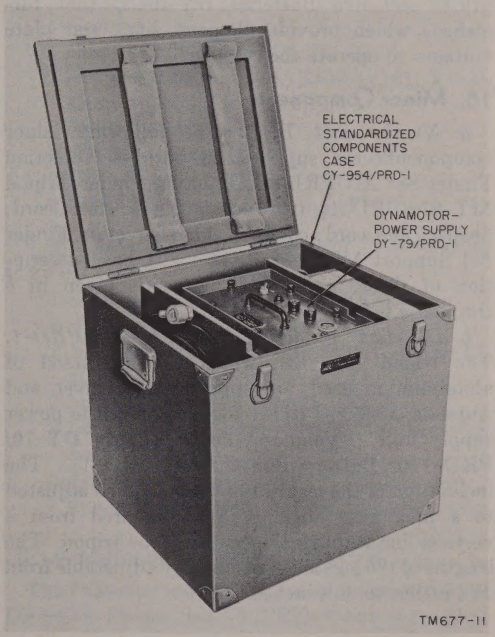

Figure 11. Electrical Standardized Components Case CY–954/PRD–1.

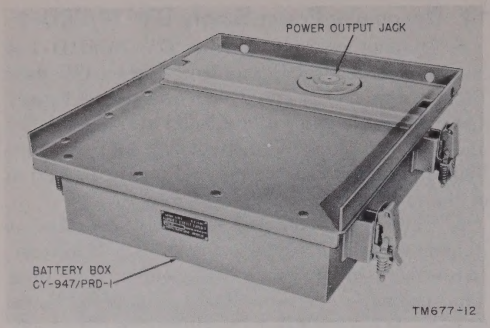

Figure 12. Battery Box CY–947/PRD–1.

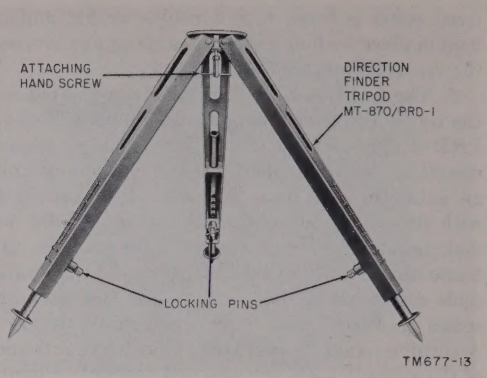

Figure 13. Direction Finder Tripod MT–870/PRD–1.

15. Battery Box CY–947/PRD–1

a. Battery Box CY–947/PRD–1 (fig. 12) is used to furnish power in place of the dynamotor-power supply. The unit has no operating controls. A wiring diagram is shown in figure 82. The dimensions, volume, and weight of the unit are given in paragraph 9.

b. The battery box contains seven batteries. Within the battery box are two Batteries BA–419/U and five Batteries BA–404/U (not furnished) which provide filament, bias, and plate voltages to operate the receiver.

16. Minor Components

a. Number and Type. The following minor components are supplied as part of Direction Finder Set AN/PRD–1: Direction Finder Tripod MT–870/PRD–1; two power cords; test cord; headset and cord; compass; and Direction Finder Set Support MT–1283/PRD–1. A brief description of these minor components is given in *b* through *g* below.

b. Direction Finder Tripod MT–870/PRD–1. The tripod (fig. 13), which is constructed of aluminum is used to support the receiver and Antenna AS–536/PRD–1 together with the power supply unit (Dynamotor-Power Supply DY–79/PRD–1 or Battery Box CY–947/PRD–1). The inclination of the legs of the tripod can be adjusted to a maximum angel of 35° measured from a vertical line through the center of the tripod. The lengths of the legs are continuously adjustable from 28½ inches to 36½ inches.

c. Power Cords. The power cords (fig. 23) are furnished to connect the dynamotor-power supply to a 24-volt vehicular storage battery. One cord is 50 feet long (W1), and the other is 8 feet long (W2); either cord may be used. Both cords are made of shielded cable consisting of four conductors (two No. 10 American Wire Gage (AWG) and two No. 14 AWG). One No. 10 conductor and one No. 14 conductor are used as one wire of the cord. The cords are terminated at one end by a type 164–2 Amphenol male connector; the other end is terminated by a type 10–42622–2P Bendix waterproof male connector.

d. Test Cord. The test cord (fig. 23) consists of a 60-inch length of a five-conductor No. 22 AWG cable with one end terminated by an eight-pin male power connector and the other by an eight-pin female power connector. The test cord is used when the receiver is removed from its cabinet for servicing.

e. Headset. The headset (fig. 14) is a standard Navy type CW–49507 headset complete with Cord CD–307.

f. Compass. The compass (fig. 15) is a 4-inch, floating-dial, magnetic-type instrument with folding sights. Its scale is divided in 1° divisions from 0° to 90° in each quadrant. The zero points are at N (north) and S (south) positions. A ball joint and socket fitting is supplied for attaching the compass to the tripod for orienting the equipment. Both compass and fitting are contained in a leather carrying case.

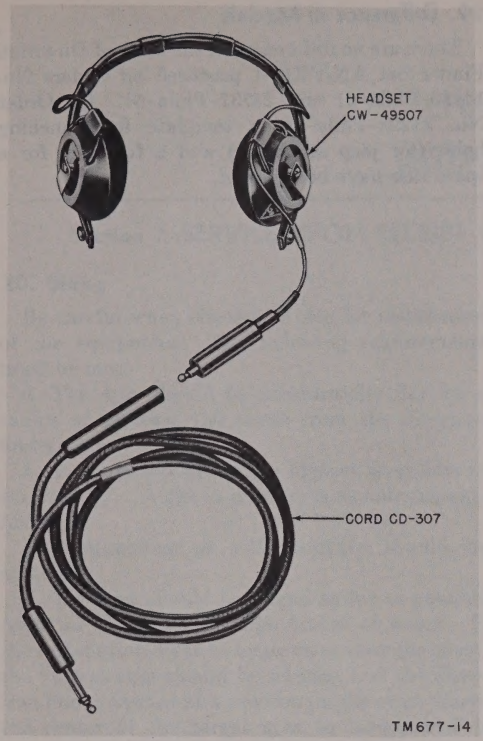

Figure 14. Headset and cord.

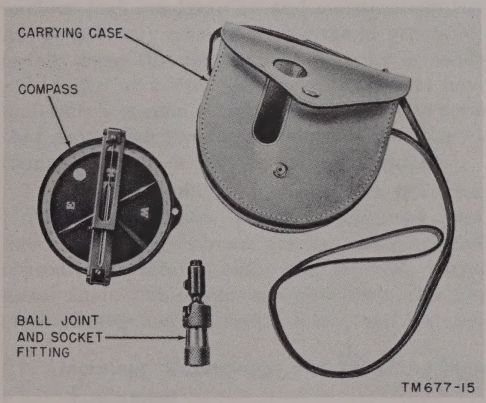

Figure 15. Surveyor's Magnetic Compass MX–1454/U.

g. Direction Finder Set Support MT–1283/PRD–1. The direction finder set support provides a means of mounting and leveling the equipment in the back of a standard jeep. View A, figure 24 shows the mounting support rear end. View B shows the mounting support front end. Receiver holding screws and side and forward leveling adjustments are provided for holding and leveling the direction finder set. Figure 25 shows the equipment mounted in a jeep.

17. Running Spares

A group of running spares is supplied with each Direction Finder Set AN/PRD–1. Spares for Radio Receiver R–395/PRD–1 are stored in Electrical Standardized Components Case CY–949/PRD–1; those for Dynamotor-Power Supply DY–79/PRD–1 are stored in Electrical Standardized Components Case CY–954/PRD–1. Spares are provided for all normally expendable items such as tubes, crystals, pilot lamps, and fuses. Following is a list of running spares:

a. Running Spares for Radio Receiver R–295/PRD–1.

1 electron tube: type 1R5 (V103).
7 electron tubes: type 1U4 (V105–V110 and V112).
2 electron tubes: type 1U5 (V111, V114).
1 electron tube: type 3A5 (V113).
1 electron tube: type 3Q4 (V115).
2 electron tubes: type 6AK5W (V101, V102).
1 electron tube: type 6C4W (V104).
2 crystals, 100 kc (Y103).
2 crystals, 1.3 mc (Y102).
2 crystals, 4.0 mc (Y101).
2 fuses, .25 ampere 250 volts (F101).

b. Running Spares for Dynamotor-Power Supply DY–79/PRD–1.

1 electron tube: type 6AK5W (V3).
2 electron tubes: type 12AU7 (V1, V2).
2 ballast tubes: type GL–5624/B–46 (RT1, RT2).
2 fuses, 10 amperes, 32 volts (F1, F2).
2 lamps, .15 amperes, 6 to 8 volts, bayonet base (I 1).
2 dynamotor brushes, E4, for primary side.
2 dynamotor brushes, E5, for secondary side.

18. Additional Equipment Required

The following material is *not supplied* as part of Direction Finder Set AN/PRD–1 but is required for its installation, orientation, and operation:

a. One stake for orientation of equipment.

b. One 24-volt vehicular storage battery for operation of Dynamotor-Power Supply DY–79/PRD–1.

c. One bias Battery BA–409/U, for operation of Dynamotor-Power Supply DY–79/PRD–1.

d. Two Batteries BA–419/U and five Batteries BA–404/U for Battery Box CY–947/PRD–1.

19. Difference in Models

There are no differences in the units of Direction Finder Set AN/PRD–1 procured on Orders No. 14180–Phila–51 and 25737–Phila–54. On Order No. 31228–Phila–55, a template for punching holes (for jeep mounting) and a fuse clip for a spare fuse have been added.

CHAPTER 2
INSTALLATION

Section I. SERVICE UPON RECEIPT OF DIRECTION FINDER SET AN/PRD-1

20. Siting

Be careful when choosing a site for installation of the equipment. The following requirements must be met:

a. The area should be substantially flat for a radius of at least 150 yards from the direction finder.

b. The area should be the highest level area in the vicinity. A site in a valley is usually unsatisfactory.

c. Mountainous or hilly country should be avoided.

d. The area should be inland as far as possible from the shore line of large bodies of water. If the installation must be made on or near the coast, the flattest area should be selected and the direction finder erected at a position on the coast where the center of the target area to be serviced is perpendicular to the coast line.

e. The earth at or around the site should have uniform high conductivity and moisture content. Areas uniformly covered with grass or vegetation usually meet this requirement. Rocky or sandy soil is poor as a site. However, areas that have uniformly low conductivity are preferable to areas that have high conductivity spotted with rock formation, sand, or varying moisture content.

f. The site should be removed from tall trees, buildings, wire fences, power or telephone lines, radio antennas, railroad tracks, sharp ground contours (mountains, cliffs, and ravines), buried metal conductors (cables and pipe lines), chimney stacks, water towers, rivers, lakes, and streams.

21. Uncrating, Unpacking, and Checking New Equipment

Note. For used or reconditioned equipment, refer to paragraph 34.

a. General. The direction finder set may be shipped in oversea packing crates or in domestic packing crates and, sometimes, in its own carrying cases. When new equipment is received, select a location where the equipment may be unpacked without exposure to the elements. The instructions given in *b* below apply to equipment shipped in export packing crates; the instructions given in *c* and *f* below apply to equipment shipped in domestic packing crates. For equipment shipped in its own carrying cases, no special unpacking and uncrating procedures are necessary. Check to make sure that all carrying cases are present and that the equipment is undamaged.

Caution: Be careful in uncrating, unpacking, and handling the equipment; it is easily damaged. If it becomes damaged or exposed, a complete overhaul might be required or the equipment might be rendered useless.

b. Step-by-Step Instructions for Uncrating and Unpacking Export Shipments.

(1) Cut and fold back the steel straps (fig. 16).

(2) Remove the nails holding the top of the crate with a nail puller. Remove the top of the packing crate. *Do not attempt to pry off the sides and top; the equipment may become damaged.*

(3) Remove the moistureproof barriers and any excelsior or corrugated paper covering the equipment inside the crate. See below for instructions on removing the waterproof metal container (if used).

(4) Remove the equipment from its inner container.

(5) Inspect the equipment for possible damage incurred during shipment.

(6) Check the contents of the packing case against the master packing slip.

c. Opening Cardboard Carton and Waterproof Barrier. No special instructions are needed for opening the waterproof paper barrier and removing the equipment from the cardboard carton.

d. Instructions for Opening Metal Containers. The top of the metal container is soldered to the sides. To open, break the soldered seam by pry-

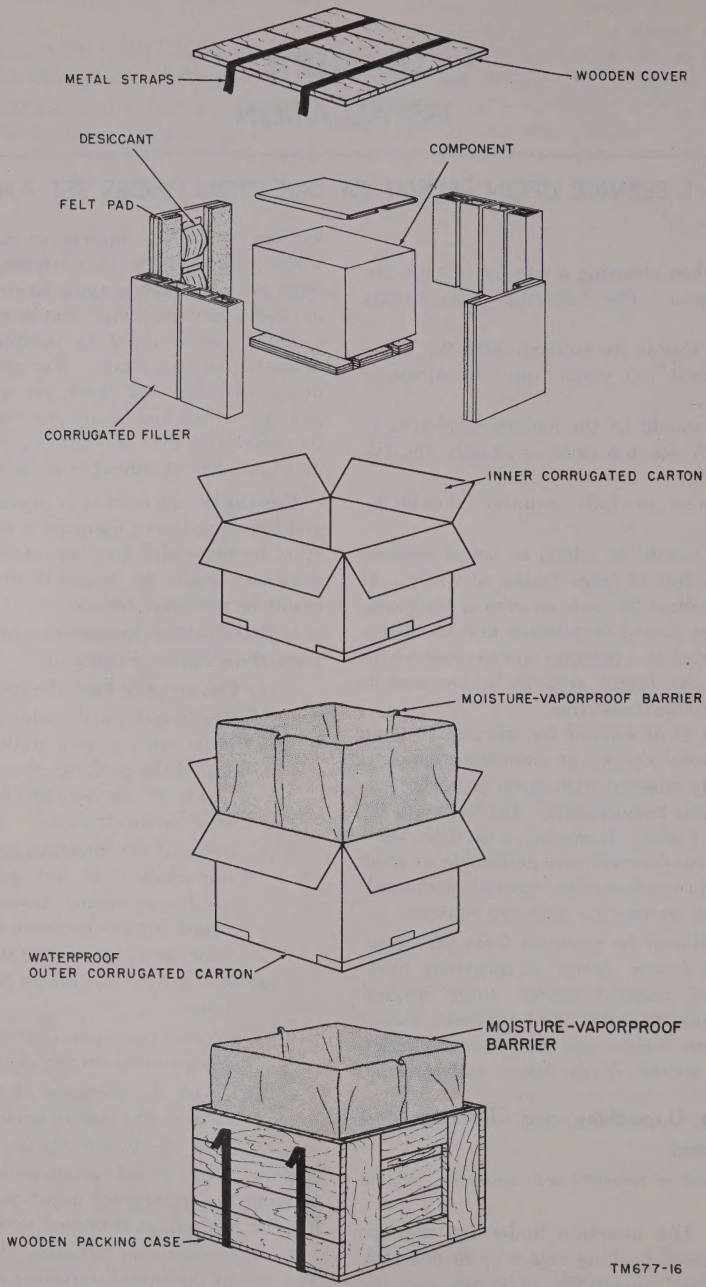

Figure 16. Typical unit packed for export shipment.

ing the side of the container away from the soldered seam as follows:

(1) Wipe off the excess solder with a soldering iron. *Do not use a torch because the contents of the container are inflammable.*
(2) With a wooden block or a screw driver, pry the sides from the soldered seam.
(3) When the seam is completely open, pry off the cover.
(4) Remove the bags of desiccant and the protective cardboard packing, and lift or draw out the package from within.

e. Checking. Check the contents against the master packing slip.

f. Unpacking Domestic Packing Cases. Direction Finder Set AN/PRD–1 may be received in domestic packing cases. The instructions in *b* above apply also to unpacking domestic shipments. Cut the metal bands. Open the cartons that protect the equipment, or, if heavy wrapping paper has been used, remove it carefully and take out the components. Check the contents of the packing crate against the master packing slip.

Section II. INSTALLATION PROCEDURE

22. Direction Finder Tripod MT–870/PRD–1

a. Remove the tripod from its carrying case (fig. 7).

b. Place the points of the tripod legs (fig. 13) on the ground and adjust them for maximum inclination (about 35° with the vertical).

c. Orient the tripod legs so that they will not interfere with the operator when the equipment is set up for use (par. 33).

d. Test the installation of the tripod to be sure it is upright and rigidly fixed on the ground before installing any equipment on it.

23. Compass

a. Remove the compass from the carrying case. The ball joint and socket mounting fitting is contained in the leather carrying case (fig. 15).

b. Attach the compass to the tripod (fig. 26) and orient the equipment as instructed in paragraph 33.

c. After orientation, remove the compass and its ball joint and socket and replace them in the leather carrying case. *Be careful not to disturb the position of the tripod.*

24. Dynamotor-Power Supply DY–79/PRD–1

a. Remove the dynamotor-power supply from its carrying case. Also remove the power cord (W1 or W2, fig. 23) of the length desired.

b. Mount the dynamotor cabinet containing the dynamotor-power supply on the tripod by means of the mounting plate on the bottom of the cabinet and the attaching hand screw at the top of the tripod. Make sure the cabinet is fastened securely.

c. At the rear of the top of the dynamotor cabinet (fig. 17) is power output jack J401. This jack is connected to J402 (fig. 18) inside the dynamotor cabinet. When the dynamotor chassis is placed into the dynamotor cabinet, J3 of the dynamotor connects to J402 in a similar manner to that used for connecting the receiver to its cabinet (par. 26). When the receiver is mounted on top of the dynamotor cabinet, power output jack J401 (on the dynamotor cabinet) engages with power supply jack J303 (on the receiver cabinet, fig. 20), thus furnishing power to the receiver. The two cabinets are fastened rigidly together by four spring-type catches. On the bottom of the dynamotor cabinet is a mounting plate for attaching the unit to Direction Finder Tripod MT–870/PRD–1.

d. Throw the dynamotor-power supply POWER switch to OFF.

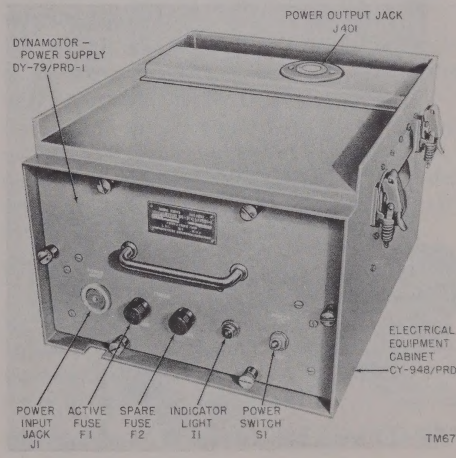

Figure 17. Dynamotor-Power Supply DY–79/PRD–1 in its cabinet.

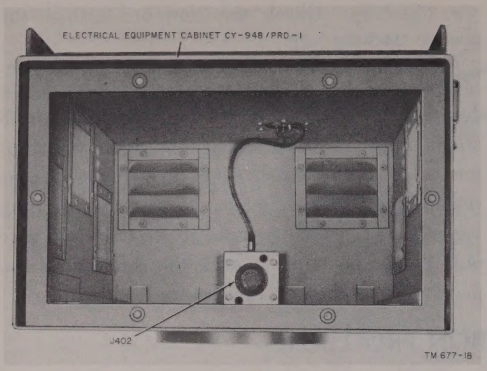

Figure 18. Electrical Equipment Cabinet CY–948/PRD–1.

e. Connect the vehicular storage battery to the POWER INPUT jack on the dynamotor-power supply panel; use the 50-foot or 8-foot power cord (fig. 23) as required.

25. Battery Box CY–947/PRD–1

a. If it is necessary to use the battery box (fig. 12) in place of the dynamotor-power supply, first install the dry batteries in the box. Refer to paragraph 15 for the number and type of batteries to be used and to figures 19 and 82 for the layout and connections to be made. *Make sure that the three output voltages of 1.5 volts, 6.3 volts, and 90 volts are obtained at the proper terminals of the power supply output jack (J601, fig. 19).*

b. When the dry batteries have been installed, replace the cover on the cabinet and mount the unit on the tripod in the same manner as the dynamotor was mounted. Four spring-type clamps are provided on the sides for attaching the battery box to the receiver cabinet.

c. At the rear top of the cabinet is the power output jack (J601). This is connected to the power supply jack (J303, fig. 20) of the receiver cabinet when the battery box is attached to the receiver cabinet.

d. When not in use, the battery box is stored in the same carrying case as the receiver (Electrical Standardized Components Case CY–949/PRD–1).

26. Radio Receiver R–395/PRD–1

a. Remove the radio receiver from its carrying case.

b. Mount the cabinet containing the receiver on top of the cabinet containing the dynamotor-

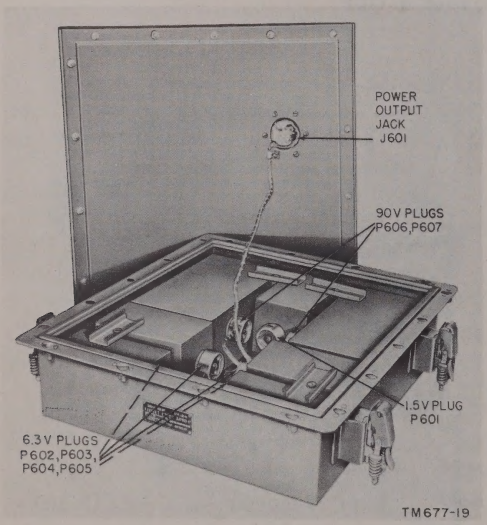

Figure 19. Battery Box CY–947/PRD–1, showing arrangement of dry batteries.

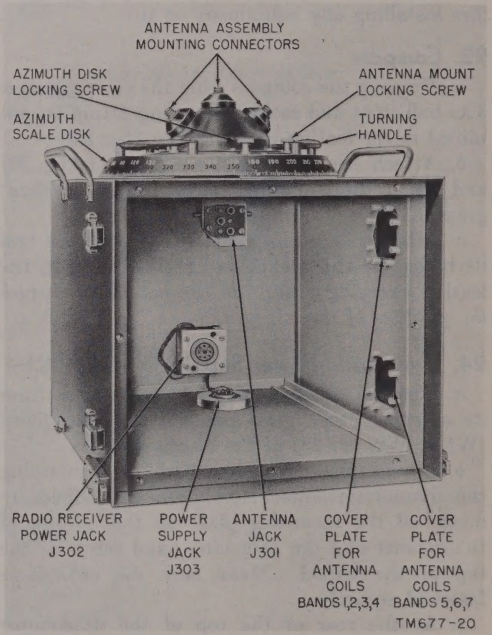

Figure 20. Electrical Equipment Cabinet CY–946/PRD–1, inside view showing female jacks.

power supply (or on top of the battery box, when used). Perform this step carefully so that the male power supply jack (J303) on the bottom of the receiver cabinet will engage with the female power output jack (J401, fig. 17) on top of the dynamotor cabinet, or with the female power output jack (J601, fig. 19) on top of the battery box.

c. Fasten the four spring-type clamps (two on each side) on the dynamotor-power supply (or battery box) to the hooks on the sides of the receiver cabinet, and snap them closed. Make sure the two units are fastened securely together.

d. Radio Receiver R–395/PRD–1 (housed in Electrical Equipment Cabinet CY–946/PRD–1) is provided with Electrical Equipment Cabinet Cover CW–230/PRD–1 (fig. 21). This cover is mounted at the bottom of the cabinet, on two slide brackets, and may be dropped down (fig. 21), or may be completely removed (fig. 8). The inside cover is provided with a bracket arm which automatically throws POWER switch S104 to the OFF position when the cover is closed.

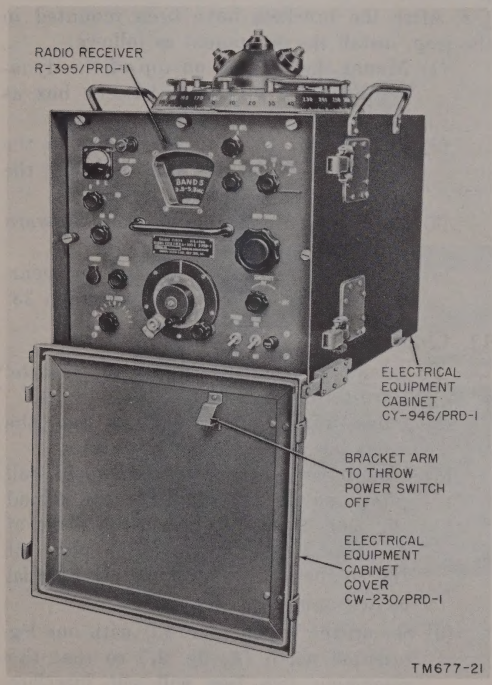

Figure 21. Radio Receiver R–395/PRD–1 housed in cabinet, cover open.

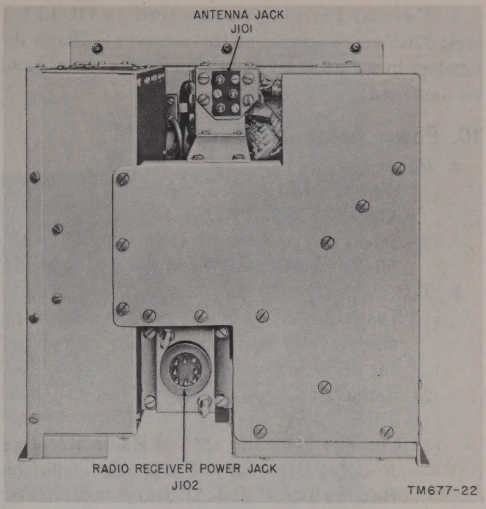

Figure 22. Radio Receiver R–395/PRD–1, rear view showing male jacks.

e. The top of Radio Receiver R–395/PRD–1 has a male antenna jack (J101), and the rear has a power jack (J102) (fig. 22). When the receiver is installed in the cabinet, male jacks J101 and J102 engage female jacks J301 and J302 (fig. 20) respectively, thus automatically connecting the receiver to both the antenna and the power supply.

27. Antenna AS–536/PRD–1

(fig. 6)

a. Remove Antenna AS–536/PRD–1 from its carrying case (fig. 7).

b. Adjust the center rod (sense antenna section) of the antenna assembly so that the rod extends to the maximum length.

c. Unfold the antenna assembly, and attach it to the rotary antenna mount on the top of the receiver cabinet (fig. 6). Make sure the antenna assembly is fastened securely to the three electrical fittings on the antenna assembly mount.

28. Antenna AT–301/PRD–1

Whenever the direction finder set is operated on BAND 7, Antenna AT–301/PRD–1 must be attached to the sense antenna section of the antenna assembly. Make sure that a tight connection is made between the two sections.

29. Headset CW–49507 and Cord CD–307

a. Remove the headset and cord (fig. 14) from case CY–949/PRD–1 (fig. 10).

b. Connect the plug on the cord to OUTPUT jack J103 on the panel of the receiver. Place the headset in a convenient position so that it will not be damaged.

30. Power Cords and Test Cord

a. Power Cords.

(1) Remove the power cords (fig. 23) from Case CY–954/PRD–1 (fig. 11).

(2) Select the cord length required (W1 is the 50-foot cord, and W2 is the 8-foot cord).

b. Test Cord.

(1) Test cord W1 (fig. 23) is only used when the receiver is removed from its cabinet for servicing.

(2) Remove the test cord from Case CY–949/PRD–1 (fig. 10).

(3) Connect J102 (fig. 22) on Radio Receiver R–395/PRD–1 to J601 (fig. 19) on Battery Box CY–947/PRD–1 (or J401 on Electrical Equipment Cabinet CY–948/PRD–1).

31. Accessories

a. If the direction finder set is transported without the three carrying cases, provision should be made to include the running spares (par. 17) and the test cord.

b. Two copies of the manual on the direction finder set are contained in the receiver carrying case.

32. Jeep Mounting

a. If the equipment is to be mounted on a jeep, a suitable mounting bracket must be attached to the jeep. Figure 24 shows the jeep mounting bracket supplied with the equipment. Figure 25 shows the direction finder set mounted in a typical position in a jeep. The mounting bracket must be rigidly fastened in a location in a manner that the weight of the mounting bracket and equipment (160 pounds, approx.) will not cause the installation to vibrate. Additional reinforcement must be supplied to the jeep fender by adding a right-angle fender reinforcing bracket, such as shown in figures 25 and 86. A detailed view of all brackets and hardware can be found in the exploded view of figure 87.

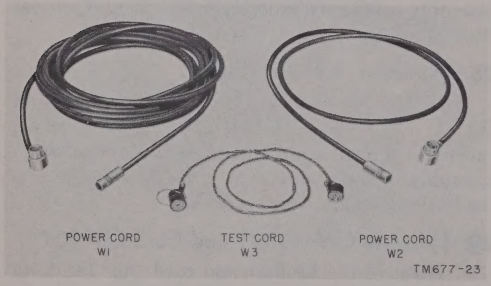

Figure 23. Power and test cords.

b. If the equipment is to be operated in a vehicle having a semidark interior or if it is to be used at night, sufficient artificial lighting must be available for the azimuth scale and all panel markings to be read easily by operating personnel. This may require a portable extension lamp. Sufficient space must be available to rotate the antenna and operate the controls of both the receiver and dynamotor-power supply. Also sufficient space must be allowed in front of the mounting bracket to allow the receiver and dynamotor-power supply to be mounted and withdrawn for maintenance. A minimum cubic space of 16 inches in all dimensions should be provided.

c. After the brackets have been mounted in the jeep, install the equipment as follows:

(1) Mount the receiver on top of the dynamotor-power supply or battery box as described in paragraph 26.

(2) Slide or lift the unit into place in the mounting bracket, and tighten the receiver holding screws (A, fig. 24).

(3) Level by eye; use the side and forward leveling screws (B, fig. 24).

(4) Orient the set; use the tripod and compass method described in paragraph 33

33. Orientation

a. To orient the direction finder to *magnetic north*, proceed as follows:

(1) Adjust the compass scale so that the index line is at the 360° mark.

(2) Mount the compass by means of its ball joint and socket fitting to the tripod (fig. 26). Make sure that the plane of the tripod table top and the plane of the compass are approximately parallel as determined by the eye.

(3) Set up the tripod (par. 13) with one leg oriented north (A, fig. 27) so that the remaining two legs will not interfere with the operator.

(4) Adjust the tripod until the air bubble is in

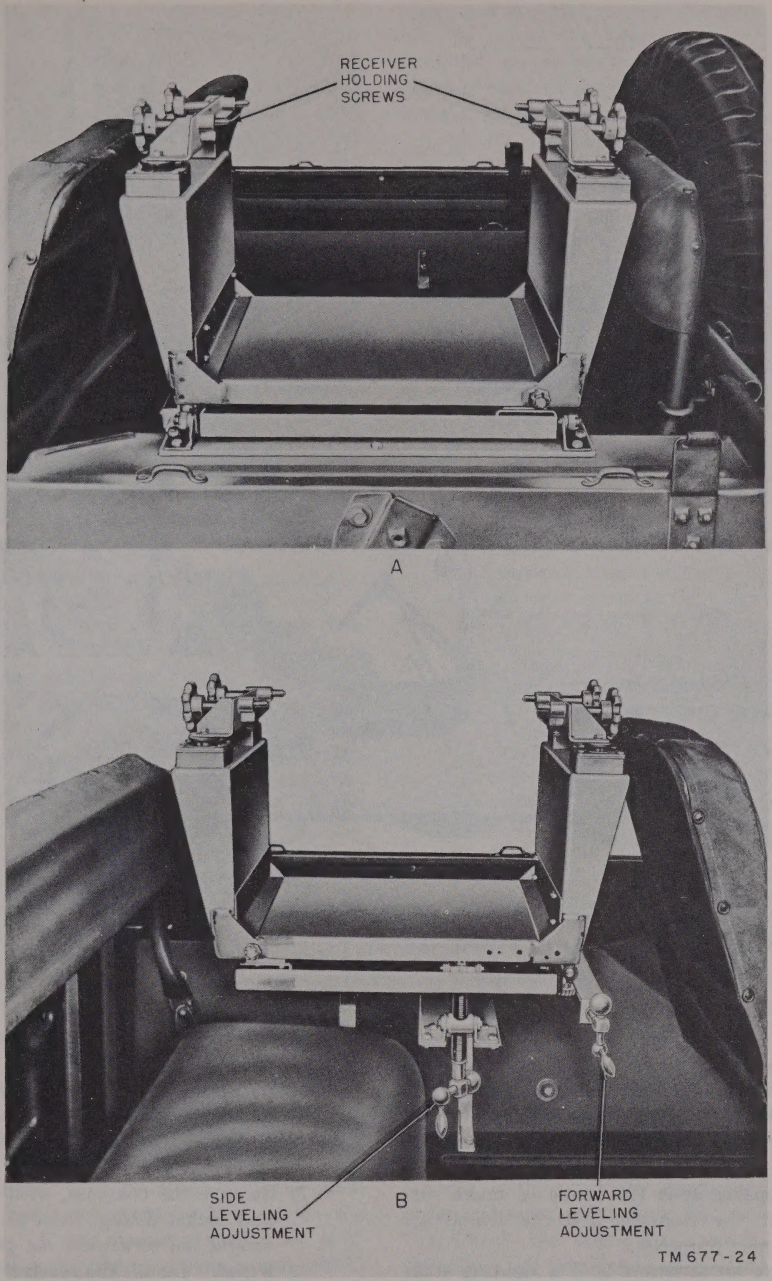

Figure 24. Direction Finder Set Support MT-1283/PRD-1 (jeep mounting bracket).

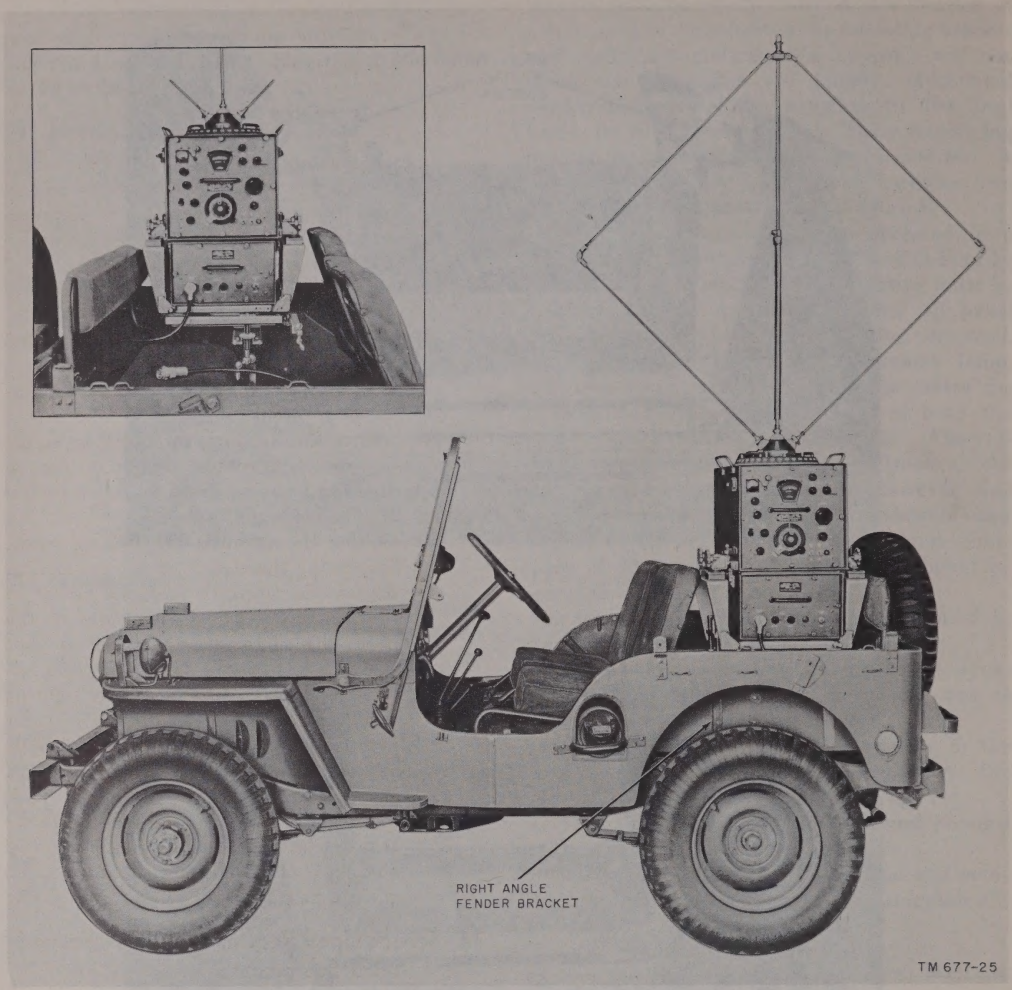

Figure 25. Equipment mounted in jeep.

the center circle of the compass spirit level. The tripod table is now level.

(5) Rotate the compass until the sights and the needle of the compass coincide at magnetic north. Check as indicated in subparagraphs (2) above to make sure that the compass and the tripod are aligned properly.

(6) Have an assistant hold a sighting stake approximately 150 feet from the compass (A, fig. 27). Locate the stake by means of the compass sights, *exactly* in the magnetic north line of sight. When this position is obtained, direct the assistant to anchor the stake securely into the ground. Check the position of the stake to be sure it is in the line of sight.

(7) Remove the compass, with its ball joint and socket fitting, from the tripod. *Be careful not to disturb the position of the tripod.* Install the receiver (with either the dynamotor or battery box) on the tripod (pars. 22, 24, and 25).

(8) Loosen the azimuth disk locking screw

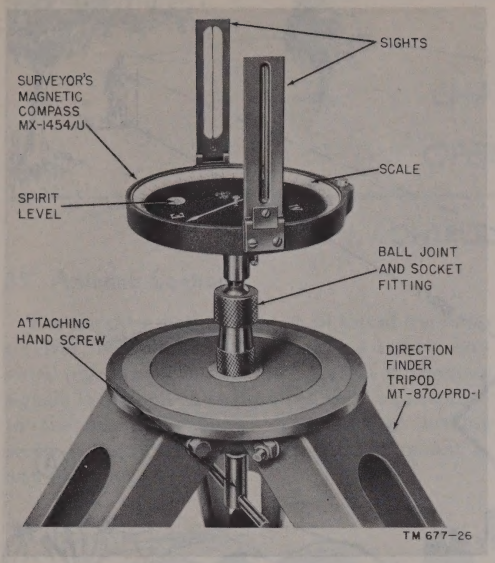

Figure 26. Compass and tripods set up for orientation of set.

(fig. 20) and rotate the azimuth scale disk until the 90° (white) mark coincides with the azimuth scale indicator on top of the cabinet. Tighten the azimuth disk locking screw.

(9) Loosen the three antenna mount locking screws so that the N marked on the head faces the stake. Line the edges of the loop with the stake (B, fig. 27). Tighten the antenna mount locking screws. The antenna is now oriented to magnetic north, and rotating the antenna by means of the turning handle will give correct azimuth readings on the azimuth scale.

b. If it is necessary to orient the equipment to true north, the procedure is similar to that given in *a* above except that before fixing the line of sight and locating the sighting stake, it is necessary to determine the magnetic declination of the place where the equipment is being used. Be sure the compass scale is set so that the index line is at the 360° mark. If the magnetic declination is 3° west, rotate the compass scale clockwise until the small fixed pointer coincides with the 3° mark on the compass scale. If the magnetic declination is 3° east, then rotate the compass scale counterclockwise until the pointer coincides with the 357° mark (360°—3°) on the compass scale. With the line of sight thus determined as true north, proceed as instructed in *a* above.

c. To orient the equipment when it is jeep mounted, an alternate method is necessary because of compass deviation in the presence of the metal mass of the jeep. Proceed as follows:

(1) Determine a northerly direction from the jeep location (direction finding location).

(2) Mount the compass on a sturdy object (use the tripod if available) approximately 200 feet from the direction finder set and in the northerly direction.

(3) Level the compass and line the sights with the center of the loop assembly.

(4) Read the compass scale opposite the north-seeking end of the pointer.

(5) Subtract 90° from this reading to obtain the orientation angle.

(6) Loosen the azimuth disk locking screw (fig. 20) and rotate the azimuth scale disk until the white scale is set to the orientation angle.

(7) Tighten the azimuth disk locking screw.

(8) Loosen the three antenna mount locking screws and rotate the antenna mount so that the white N mark is located on the north side of the set and the loop arms are in line with the center of the compass location as determined by sighting through the compass sights.

(9) Tighten the three antenna mount locking screws. The jeep-mounted set is now oriented to magnetic north. If it is necessary to orient the equipment to true north, the magnetic declination of the place must be known and set in on the compass scale as described in *b* above.

34. Service Upon Receipt of Used or Reconditioned Equipment

a. Follow the instructions given in paragraph 21 for uncrating, unpacking, and checking the equipment.

b. Check the used or reconditioned equipment for tags or other indications pertaining to changes in the wiring of the equipment. If any changes in wiring have been made, note the change in this manual on the schematic diagrams. Include the order and serial numbers of the modified set.

c. Check the operating controls for ease of operation. If lubrication is required, refer to the lubrication instructions in paragraphs 59 and 60.

d. Perform the installation and orientation procedures given in paragraphs 22 through 33.

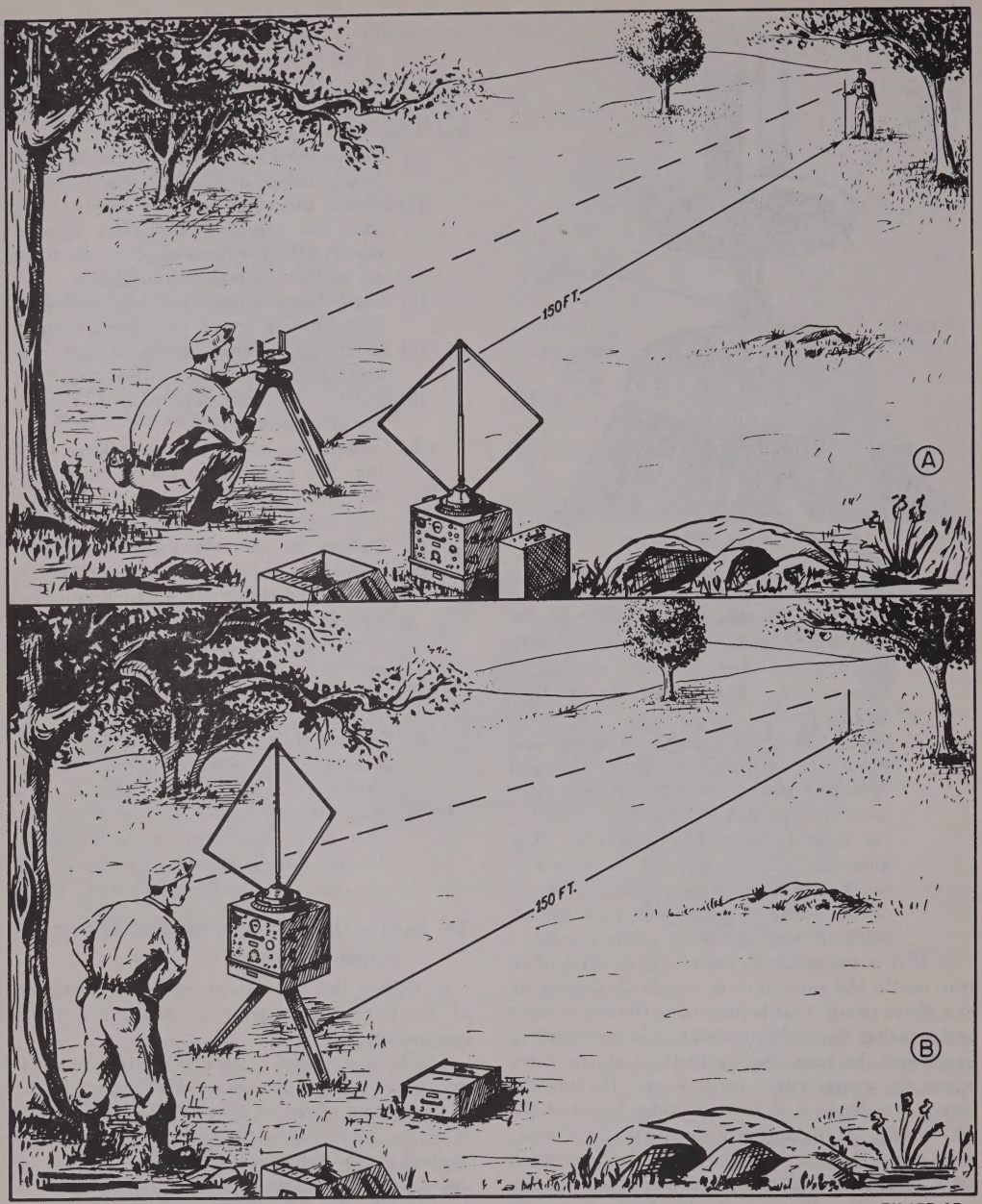

Figure 27. Method of orienting the direction finder.

CHAPTER 3

OPERATION

Section I. CONTROLS AND INSTRUMENTS

35. Antenna Controls

The antenna mount, located on top of the radio receiver, is rotated with the turning handle provided (fig. 28). The direction of origin of incoming signals is read on the azimuth scale disk attached to the antenna mount. The azimuth locking screw is provided to lock the antenna mount in any position.

36. Receiver Controls

(fig. 28)

The following table lists the controls of the receiver and indicates their functions:

Control	Function
TUNING dial	Indicates tuned frequency of receiver.
Main tuning and vernier tuning controls (C149 through C156).	Vary frequency of receiver throughout a band.
Meter (M101)	Indicates supply voltages and signal level.
Panel light (I 102)	Illuminates panel.
METER ADJ. (R194, screwdriver adjustment).	Used to zero meter pointer.
Meter switch (S109)	Connects meter to any of following: OFF—meter disconnected. A—1.5-volt power supply. B—90-volt power supply. C—6.0-volt power supply. IND—indicates signal level in receiver.
AM-FM switch (S101)	Selects circuits for am or fm reception.
OUTPUT jack (J103)	Used to connect output of receiver to headset.
AUDIO VOLUME control (R184).	Controls volume of audio output.
BFO PITCH control (S103, C200A/B).	Switches the beat-frequency oscillator ON and OFF, and varies its frequency.
DIAL ADJ. control	Moves dial indicator of main TUNING dial.
ANT. TRIMMER control (C157, C158).	Insures tracking of antenna stage.
Function switch (S108)	Selects receiver input circuit as follows: *Position* — *Function* CAL — The crystal oscillator output is applied to the input of the receiver for dial calibration. MONITOR — The sense antenna only is coupled to the receiver input. DF — The loop antenna only is coupled to the receiver input. This is the normal direction finding position. WHITE and RED. — Both the sense and loop antennas are coupled to the receiver but with reversed polarity of loop connections between the two positions. These positions are used to reference the red and white azimuth scale markings during sense operation of the direction finder.
BAND SWITCH (S107, S102).	Selects one of seven bands. Controls the crystal calibrate and beat-frequency oscillators.
SENSITIVITY control and AVC switch (R171, S106).	Switches in AVC circuit and adjusts intermediate-frequency (if) gain.
LIGHT switch (S105)	Turns panel light ON and OFF.
POWER switch (S104)	Turns power supply circuits ON and OFF; illuminates TUNING dial light.
FUSE (F101)	Protects receiver from overloads.

37. Dynamotor-Power Supply Controls

(fig. 28)

The following table lists the controls of the dynamotor-power supply and indicates their functions.

Control	Function
POWER INPUT jack (J1).	Used to connect dynamotor-power supply to vehicular storage battery (using cable W1 or W2).
Indicator light (I1)	Indicates whether POWER switch is in ON or OFF position.
POWER switch (S1)	Turns storage battery and bias battery circuits to their ON or OFF positions.

38. Fuses

The following table lists the fuses used in the overall equipment and indicates their functions (fig. 28).

Control	Function
Active fuse (F1)	Protects the dynamotor-power supply against overloads.
Spare fuse (F2)	Replacement for fuse F1.
Fuse (F101)	Protects the receiver from overloads.

Section II. OPERATION UNDER USUAL CONDITIONS

39. Preliminary Starting Procedure

(fig. 28)

a. Before using the starting procedure given in paragraph 40, perform the preliminary starting procedures given in the table in *c* below.

b. If the dynamotor-power supply is used as the power source, throw the POWER switch to the OFF position.

c. Set the front panel controls of the receiver as follows:

Control	Position
Meter switch	OFF.
AM-FM switch	AM.
AUDIO VOLUME control	Counterclockwise.
BFO PITCH control	OFF.
POWER switch	OFF.
LIGHT switch	OFF.
SENSITIVITY control	Counterclockwise.
BAND SWITCH	Any band.
Function switch	MONITOR.
ANT. TRIMMER control	Counterclockwise.
DIAL ADJ. control	Counterclockwise.

40. Starting Procedure

(fig. 28)

Note. During the starting procedure, if abnormal results are obtained, refer to the equipment performance checklist (par. 66*f*).

a. If the dynamotor-power supply is used, turn the POWER switch to the ON position.

b. Allow a few minutes for the dynamotor-power supply to warm up and then throw the receiver POWER switch to the ON position and turn the function switch to the CAL position.

c. On the meter, check the output of the power source for the A, B, and C positions of the meter switch.

d. Turn the LIGHT switch to the ON position.

e. Plug the headset into the OUTPUT jack.

f. Allow a few minutes for the receiver to warm up; then check the output by turning the AUDIO VOLUME control and the SENSITIVITY control clockwise.

41. Receiver Calibrating Procedure

After starting the equipment, check the calibration of the receiver as follows:

a. Turn the meter switch to the IND position.

b. Turn the BAND SWITCH to the band to be calibrated.

c. Turn the main and vernier tuning controls until the red line on the TUNING dial is underneath the tuning dial indicator.

d. Slowly rotate the vernier tuning control until a maximum reading is obtained on the meter.

e. Lock the main tuning control and turn the DIAL ADJ. control until the dial indicator is *exactly* above the red line marker on the dial.

f. Do not move the DIAL ADJ. control until another frequency band is used, at which time the receiver must be recalibrated.

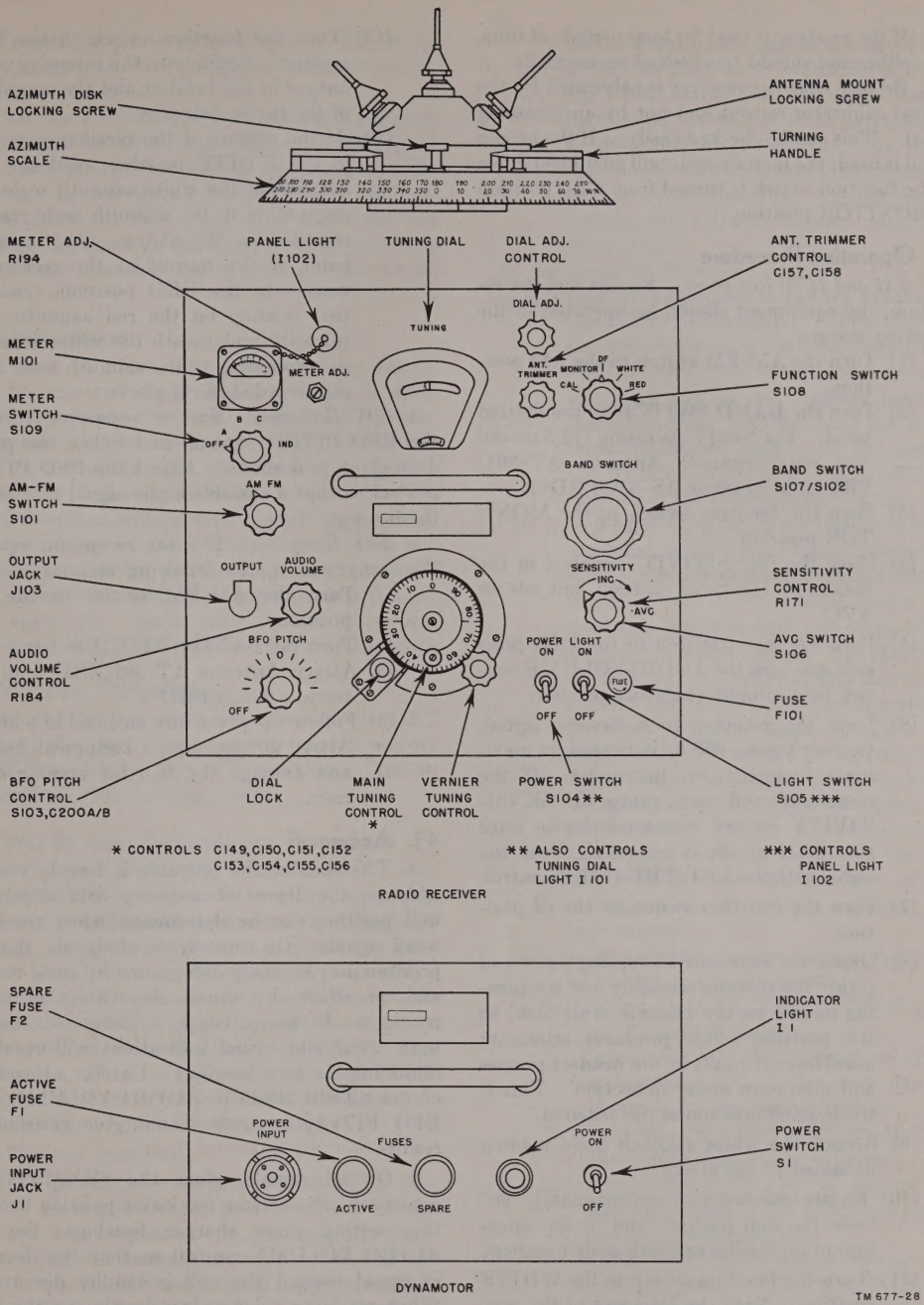

Figure 28. Operating controls and instruments of the direction finder set.

g. If the receiver is used for long periods of time, the calibration should be checked occasionally.

h. Be sure that the receiver is calibrated by the crystal calibrator output and not by an incoming signal. This can be checked easily. If the proper signal is used, the meter needle will go up and down as the function switch is turned from CAL position to MONITOR position.

42. Operating Procedure

a. AM and ICW Reception. For am and icw reception, the equipment should be operated in the following manner:

(1) Turn the AM-FM switch to the AM position.

(2) Turn the BAND SWITCH to the desired band. For band 7 operation (12.5 mc–30 mc) only, connect Antenna AT–301/PRD–1 to Antenna AS–536/PRD–1.

(3) Turn the function switch to the MONITOR position.

(4) Place the SENSITIVITY control in the maximum clockwise position, but not on AVC.

(5) Turn the meter switch to the IND position and turn the AUDIO VOLUME control to a suitable clockwise position.

(6) Tune the receiver to a desired signal. Correct tuning will be indicated by maximum deflection on the meter. If the meter reads off scale, rotate the SENSITIVITY control counterclockwise until the meter needle is on scale. Peak the signal with the ANT. TRIMMER control.

(7) Turn the function switch to the df position.

(8) Loosen the azimuth disk locking screw and rotate the antenna assembly (use the turning handle on the azimuth scale disk) to the position which produces minimum aural output (null) in the headset phones and minimum meter deflection. This is the bearing position of the antenna.

(9) Record the white azimuth scale reading obtained in (8) above.

(10) Rotate the antenna approximately 90° from the null position and in the direction of increasing azimuth scale numbers.

(11) Turn the function switch to the WHITE position. Note the intensity of the output in the headset and the magnitude of meter deflection.

(12) Turn the function switch to the RED position. Again note the intensity of the output in the headset and the magnitude of the meter deflection.

(13) If the output of the receiver is weaker in the WHITE position, read the true bearing on the white azimuth scale corresponding to the azimuth scale reading recorded in (9) above. On the other hand, if the output of the receiver is weaker in the RED position, read the true bearing on the red azimuth scale (directly underneath the white azimuth) corresponding to the azimuth scale reading recorded in (9) above.

b. CW Reception. For cw reception, turn on the BFO PITCH control, and follow the procedure given in *a* above. Adjust the BFO PITCH control so that a suitable audio signal is heard in the headset.

c. FM Reception. For fm reception, operate the equipment in the following manner:

(1) Turn the AM-FM switch to the FM position.

(2) Turn the BAND SWITCH to band 7.

(3) Attach Antenna AT–301/PRD–1 to Antenna AS–536/PRD–1.

(4) Follow the procedure outlined in *a* above. Above 20 mc, take a reciprocal bearing and average the two for greater accuracy.

43. Accuracy

a. The skill of the operator is largely responsible for the degree of accuracy with which the null position can be determined when receiving weak signals. On some types of signals, the null position may be easily determined by aural means, and on others, by visual observation of meter readings. In many cases, simultaneous use of both aural and visual indications will result in obtaining the best bearings. Careful adjustment of the SENSITIVITY, AUDIO VOLUME, and BFO PITCH controls should give satisfactory results.

b. On all signals, place the SENSITIVITY control in the extreme clockwise position because this setting gives sharper bearings. Set the AUDIO VOLUME control so that the decrease in signal toward the null is readily discernible. When receiving voice or icw signals, use the BFO PITCH control (normally in the OFF position) to increase the bearing accuracy. On weak sig-

nals, rotate the antenna from side to side of the null, and select the middle of the null as the bearing position.

c. To check the accuracy of azimuth scale readings, rotate the antenna assembly approximately 180° from the initial reading and take another bearing. If this second bearing is not 180° removed from the first bearing, average the two bearings for greater accuracy. This check is particularly necessary at frequencies above 20 mc.

44. Disturbances

a. Weak or undesirable and inaccurate signals may be expected if the direction finder is operated under or close to steel bridges, underpasses, power lines, or power units (par. 20). When setting up the equipment, try to avoid a position where such disturbances exist.

b. Sometimes underground electric power lines, telephone lines, or even pipelines may cause disturbances. Nearby electrical or other transmitting equipment may also provide interference with operation. Under such conditions, relocation of the direction finder set may be necessary.

45. Stopping Procedure

Turn the receiver POWER switch to the OFF position; also turn the dynamotor-power supply POWER switch to the OFF position. Tighten the azimuth disk locking screw.

46. Step-by-step Antijamming Procedures

The direction finder (df) operator must recognize the difference between natural, unintentional interference, and intentional jamming. The enemy may jam direction finders to mask the location of important enemy positions. However, unintentional interference may result from nearby radio or radar transmitters, or from power generators and other electrical equipment. This interference, which is likely to occur unless the operator takes preventive measures, may produce effects similar to intentional jamming.

a. Types of Jamming.

(1) One method of jamming employs two separated transmitters operating on the same frequency. In this case, the bearing will be intermediate between the two transmitters and the DF null point will be broadened.

(2) Jamming will be recognized through the indication of a broad null. By using the carrier level of the signal at the df set, it may be possible to determine whether the broad null is due to a single source, high-power station, or from two stations as described in (1) above. The single high-power station should give the greatest carrier level reading. A null can be determined if the sensitivity control is decreased.

b. Antijamming Procedures.

(1) Vary the loop antenna and try to identify the station, or stations. When two signals are on the same frequency and transmitting from two locations, it is possible to obtain a good null halfway between these locations. Do not tune for maximum quietness. Listen to the signals and try to establish distinguishing characteristics of the two stations. These may be identified by using the beat-frequency oscillator, or by voice or noise characteristics. By means of these characteristics, try to obtain the directions of the two sources. The null may not be as sharp as that of a single signal. The direction accuracy of the df set will diminish as the signal strength of the distracting signal is increased. It is possible that the two signals will differ slightly in frequency. By detuning to either side, the interfering signal may be separated from the desired one. (Do not use the detuned dial reading as the frequency of the signal.) To increase the accuracy of the reading after detuning, readjust the loop antenna.

(2) Other antijamming procedures that may be employed are as follows:

(*a*) Adjust the ANT. TRIMMER to peak on the desired signal.

(*b*) Switch the AM-FM control to determine whether a better null can be obtained for the desired signal.

(*c*) Vary the SENSITIVITY control for the best null on a desired signal.

(*d*) Adjust the BFO PITCH control for best separation of the unwanted signal from the desired signal.

(*e*) Slowly vary the frequency tuning control to obtain a sharper null on the desired frequency each time a change of operating procedure is made (*a–d* above).

(3) If the antijamming procedures given in (1) and (2) above fail, try relocating the positions of the df stations to help discriminate against the unwanted signal.

Section III. OPERATION UNDER UNUSUAL CONDITIONS

47. General

The operation of the direction finder set may be difficult in regions where extreme cold, heat, humidity and moisture, sand conditions, etc., prevail. In paragraphs 48 through 50, instructions are given for minimizing the effects of these unusual operating conditions.

48. Operation in Arctic Climates

a. Subzero temperatures and climatic conditions associated with cold weather affect the efficient operation of the equipment. The following precautions should be observed:

b. Handle the equipment carefully. Under conditions of extreme cold, materials used in electronic equipment may become brittle and therefore subject to breakage.

c. Keep the equipment warm and dry. If the equipment is not in a heated inclosure, construct an insulated box to house it. Keep resistor heaters, if available, turned on, provided this does not overtax the power supply. If this method is impracticable, keep the filaments of all vacuum tubes lighted constantly, unless this also overtaxes the power supply.

d. Wear a knitted woolen cap over the earphones when operating in open air with headsets that do not have rubber earpieces. Frequently, when headsets without rubber earpieces are worn, the edges of the ears may freeze without the operator being conscious of this condition. Never flex rubber earcaps, since this action may render them useless. If water gets into the earphones, or if moisture condenses within them, it may freeze and impede the actuation of the diaphragm. When this happens, take the earphones to a heated area, remove the bakelite cap which holds the diaphragm, and allow the ice to melt. Finally, dry the earphones thoroughly so that no moisture remains.

e. When equipment that has been exposed to the cold is brought into a warm room, it will sweat until it reaches room temperature. This condition also may exist when equipment warms up during the day after a cold night. The equipment should be dried thoroughly to avoid rusting or possible electrical leakage.

f. Use any improvised means to protect the dry batteries in the battery cabinet since they will fail if they are not protected against the cold. If possible, preheat the batteries. Devise some sort of protective covering for the battery cabinet with kapok or spun glass fiber materials, animal skins, or woolen cloth to prevent loss of heat.

49. Operation in Tropical Climates

a. The principal difficulties of operation encountered in tropical climates are excessive moisture caused by humidity and growth of fungus. In tropical climates, radio equipment may be installed in tents or huts. When equipment is set up in swampy areas, moisture conditions are even more acute than those that are normal in the tropics. Ventilation is usually very poor, and the high relative humidity causes condensation of moisture on the equipment whenever the temperature of the equipment becomes lower than the ambient air.

b. To minimize excessive moisture, place lighted electric bulbs around (and if possible under) the equipment. Daily inspection of the equipment should be made to detect and prevent the growth of fungus.

50. Operation in Desert Climates

a. Conditions similar to those encountered in tropical climates often prevail in desert areas. Use the same means to insure proper operation of the equipment. The principal problem arising in desert operations is the large amount of sand, dust, and dirt encountered. The methods suggested in *b*, *c*, and *d*, below will minimize these difficulties.

b. House the equipment in dustproof shelters. If such housing is not available, make the building or shelter as dustproof as possible. Hang wet sacking over all openings, windows, and doors and cover the interior of the shelter with heavy paper. If the equipment is housed in a tent, secure the side walls of the tent by piling sand on the bottom to prevent them from flapping in the wind.

c. Never tie power cords, signal cords, or other

wiring connections to either the inside or the outside of tents. Desert areas are subject to sudden wind squalls which may jerk the connections loose or break the lines.

d. Make frequent checks of the equipment to detect the presence of sand and dust; when found, clean thoroughly. Pay particular attention to the condition of the parts of the equipment that need lubrication. Excessive amounts of dust, sand, or dirt that come into contact with oil or grease result in grit, which will damage the equipment.

CHAPTER 4
ORGANIZATIONAL MAINTENANCE

Section I. TOOLS AND EQUIPMENT

51. General

Tools and materials used but not supplied with this equipment are listed in paragraph 52. The tools and materials contained in Tool Equipment TE–41 are listed in Department of the Army Supply Manual SIG 6–TE–41.

52. Tools and Materials Required

The following tools and materials are not furnished as part of the direction finder set. They are required for organizational maintenance.

a. Tools.

Tool Equipment TE–41.

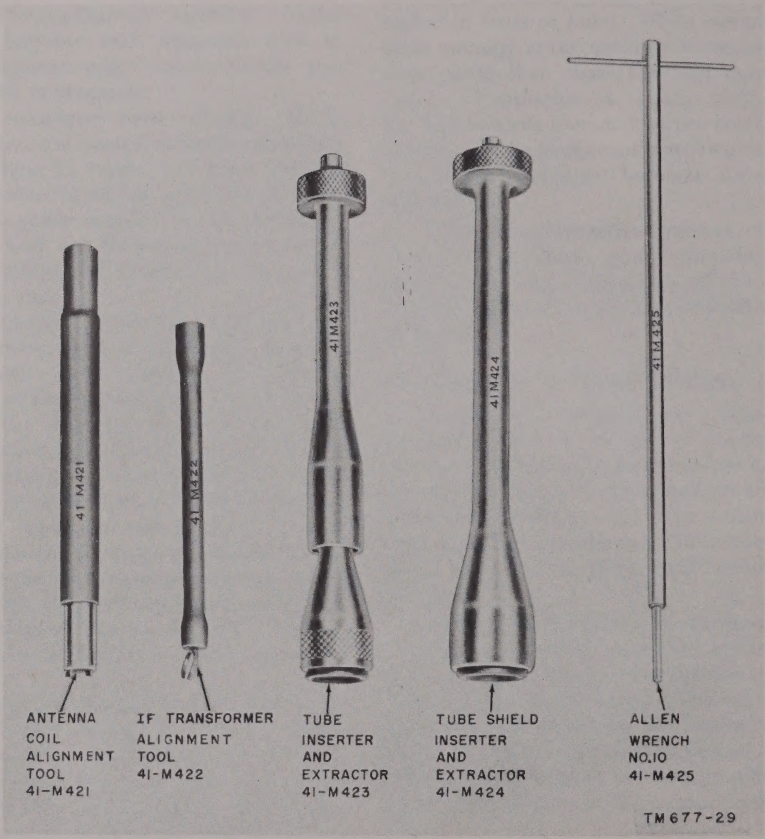

Figure 29. Special tools required for maintenance of direction finder set.

Tube Puller TL–201.

b. Materials.

Cheesecloth, bleached, lint-free.
Sandpaper, #000.
Orange stick.
Cleaning Compound (Federal Stock No. 7930–395–9542).

53. Special Tools

Five special tools are supplied for the maintenance of the direction finder set. These tools (fig. 29) are as follows:

a. Antenna coil alinement tool (type 41–M421).

b. If transformer alinement tool (type 41–M422).

c. Tube inserter and extractor for seven-pin miniature tubes (type 41–M423).

d. Tube shield inserter and extractor for seven-pin miniature tubes (type 41–M424).

e. Allen wrench, No. 10 (type 41–M425).

Section II. PREVENTIVE MAINTENANCE SERVICES

54. Definition of Preventive Maintenance

Preventive maintenance is work performed on equipment (usually when the equipment is not in use) to keep it in good working order so that breakdowns and interruptions in service will be kept to a minimum. Preventive maintenance differs from troubleshooting and repair since its object is to prevent certain troubles from occurring.

55. General Preventive Maintenance Techniques

a. Use #000 sandpaper to remove corrosion.

b. Use a clean, dry, lint-free cloth, or dry brush for cleaning all parts (including electrical contacts). If necessary moisten the cloth or brush with Cleaning Compound; then wipe the parts dry with a clean cloth.

Caution: Prolonged breathing of the fumes is dangerous. Make sure adequate ventilation is provided. Cleaning Compound is flammable; do not use near a flame.

c. If available, dry compressed air may be used at a line pressure of 40 pounds per square inch to remove dust from inaccessible places; handle the line carefully so that no mechanical damage from the air blast will result.

d. For further information on preventive maintenance techniques, refer to TB SIG 178, Preventive Maintenance Guide for Radio Communication Equipment.

56. Use of Preventive Maintenance Forms

(figs. 30 and 31)

a. The decision as to which items on DA Forms 11–238 and 11–239 are applicable to this equipment is a tactical decision to be made in the case of first echelon maintenance by the communication officer/chief or his designated representative, and in the case of second and third echelon maintenance, by the individual making the inspection. Instructions for the use of each form appear on the reverse side of the form.

b. Circled items in figures 30 and 31 are partially or totally applicable to Direction Finder Set AN/PRD–1. References in the ITEM block refer to paragraphs in the text which contain additional maintenance information.

57. Performing Exterior Preventive Maintenance

Caution: Tighten screws, bolts, and nuts carefully. Fittings tightened beyond the pressure for which they are designed may be damaged or broken.

a. Check for completeness and satisfactory condition of the receiver. The components of the receiver are listed in paragraph 9 and are illustrated in figures 6 through 29.

b. Check suitability of location and installation for normal operation (par. 20).

c. Remove dirt and moisture from antenna, headset, tripod, and cabinets of all units; also from jacks, knobs, and meters on the panels of the receiver and dynamotor units.

d. Inspect the seating of readily accessible *pluck-out* items such as lamps, fuses, etc. (figs. 28, 56, 58, 61, and 63).

e. Inspect all controls on the receiver and dynamotor-power supply for binding, scraping, excessive looseness, worn or chipped gears, misalinement, and positive action (fig. 28).

f. Check for normal operation (pars. 39–42).

g. Clean antenna, tripod, exteriors of all cabinets, panels of units, and cables.

h. Inspect carrying cases, antenna, all exposed metal surfaces of units for rust, corrosion, fungus growth, and moisture.

i. Inspect all cables for signs of cuts, breaks, fraying, deterioration, kinks, fungus growth, etc.

363564 O—55——3

OPERATOR FIRST ECHELON MAINTENANCE CHECK LIST FOR SIGNAL CORPS EQUIPMENT
RADIO COMMUNICATION, DIRECTION FINDING, CARRIER, RADAR

INSTRUCTIONS: See other side

EQUIPMENT NOMENCLATURE	EQUIPMENT SERIAL NO.

LEGEND FOR MARKING CONDITIONS: Satisfactory; X Adjustment, repair or replacement required; (X) Defect corrected.
NOTE: Strike out items not applicable.

DAILY

NO.	ITEM	CONDITION S	M	T	W	T	F	S
1	COMPLETENESS AND GENERAL CONDITION OF EQUIPMENT (*receiver, carrying cases, wire and cable, spare parts, technical manuals and accessories*). PAR. 57 a							
2	LOCATION AND INSTALLATION SUITABLE FOR NORMAL OPERATION. PAR. 57 b							
3	CLEAN DIRT AND MOISTURE FROM ANTENNA, HEADSETS, JACKS, PLUGS, CARRYING BAGS, COMPONENT PANELS. PAR. 57 c							
4	INSPECT SEATING OF READILY ACCESSIBLE "PLUCK-OUT" ITEMS: LAMPS, CRYSTALS, FUSES, CONNECTORS, PAR. 57 d							
5	INSPECT CONTROLS FOR BINDING, SCRAPING, EXCESSIVE LOOSENESS, WORN OR CHIPPED GEARS, MISALIGNMENT, POSITIVE ACTION. PAR. 57 e							
6	CHECK FOR NORMAL OPERATION. PAR. 57 f							

WEEKLY

NO.	ITEM	CONDITION	NO.	ITEM	CONDITION
7	CLEAN AND TIGHTEN EXTERIOR OF COMPONENTS AND CASES, RACK MOUNTS, SHOCK MOUNTS, ANTENNA MOUNTS, AND CABLE CONNECTIONS. PAR. 57g		13	INSPECT STORAGE BATTERIES FOR DIRT, LOOSE TERMINALS, ELECTROLYTE LEVEL AND SPECIFIC GRAVITY, AND DAMAGED CASES. PAR. 57 m	
8	INSPECT CASES, MOUNTINGS, ANTENNAS, AND EXPOSED METAL SURFACES, FOR RUST, CORROSION, AND MOISTURE. PAR. 57 h		14	CLEAN BRASS NAME PLATES, DIAL AND METER WINDOWS, JEWEL ASSEMBLIES. PAR. 57 n	
9	INSPECT CORD, CABLE, WIRE, AND SHOCK MOUNTS FOR CUTS, BREAKS, FRAYING, DETERIORATION, KINKS, AND STRAIN. PAR. 57 i		15	INSPECT METERS FOR DAMAGED GLASS AND CASES. PAR. 57 o	
10	INSPECT ANTENNA FOR ECCENTRICITIES, CORROSION, LOOSE FIT, DAMAGED INSULATORS PAR. 57 j		16	INSPECT SHELTERS AND COVERS FOR ADEQUACY OF WEATHERPROOFING. PAR. 57 p	
11	INSPECT CANVAS ITEMS, LEATHER, AND CABLING FOR MILDEW, TEARS, AND FRAYING. PAR. 57 k		17	CHECK ANTENNA FOR LOOSENESS AND PROPER TENSION. PAR. 57 q	
12	INSPECT FOR LOOSENESS OF ACCESSIBLE ITEMS: SWITCHES, KNOBS, JACKS, CONNECTORS, CAPACITORS, GENERATORS, AND PILOT LIGHT ASSEMBLIES. PAR. 57 l		18	CHECK ~~TERMINAL~~ BOX COVERS FOR CRACKS, LEAKS, DAMAGED GASKETS, DIRT AND GREASE. PAR. 57 r	

19 IF DEFICIENCIES NOTED ARE NOT CORRECTED DURING INSPECTION, INDICATE ACTION TAKEN FOR CORRECTION.

DA FORM 1 MAY 51 11-238 REPLACES DA AGO FORM 419, 1 DEC 50, WHICH IS OBSOLETE.

Figure 30. DA Form 11–238.

SECOND AND THIRD ECHELON MAINTENANCE CHECK LIST FOR SIGNAL CORPS EQUIPMENT

RADIO COMMUNICATION, DIRECTION FINDING, CARRIER, RADAR

INSTRUCTIONS: See other side

EQUIPMENT NOMENCLATURE | EQUIPMENT SERIAL NO.

LEGEND FOR MARKING CONDITIONS: ✓ Satisfactory; I Adjustment, repair or replacement required; (1) Defect corrected.
NOTE: Strike out items not applicable.

NO	ITEM	COND.
1	COMPLETENESS AND GENERAL CONDITION OF EQUIPMENT (*receiver, transmitter, carrying cases, wire and cable, microphones, tubes, spare parts, technical manuals and accessories*). PAR. 57a	
2	LOCATION AND INSTALLATION SUITABLE FOR NORMAL OPERATION. PAR. 57b	
3	CLEAN DIRT AND MOISTURE FROM ANTENNA, ~~MASCOPHONE~~, HEADSETS, ~~CHESTSETS, HEAD~~, JACKS, PLUGS, ~~TELEPHONES~~, CARRYING BAGS, COMPONENT PANELS. PAR. 57c	
4	INSPECT SEATING OF READILY ACCESSIBLE "PLUCK-OUT" ITEMS: TUBES, LAMPS, CRYSTALS, FUSES, CONNECTORS, ~~VIBRATORS, PLUG-IN COILS AND RECTIFIERS~~. PAR. 57d	
5	INSPECT CONTROLS FOR BINDING, SCRAPING, EXCESSIVE LOOSENESS, WORN OR CHIPPED GEARS, MISALIGNMENT, POSITIVE ACTION. PAR. 57e	
6	CHECK FOR NORMAL OPERATION. PAR. 57f	
7	CLEAN AND TIGHTEN EXTERIOR OF COMPONENTS AND CASES, RACK MOUNTS, SHOCK MOUNTS, ANTENNA MOUNTS, ~~COAXIAL TRANSMISSION LINES, WAVE GUIDES~~, AND CABLE CONNECTIONS. PAR. 57g	
8	INSPECT CASES, MOUNTINGS, ANTENNAS, ~~TOWERS~~, AND EXPOSED METAL SURFACES, FOR RUST, CORROSION, AND MOISTURE. PAR. 57h	
9	INSPECT CORD, CABLE, WIRE, AND SHOCK MOUNTS FOR CUTS, BREAKS, FRAYING, DETERIORATION, KINKS, AND STRAIN. PAR. 57i	
10	INSPECT ANTENNA FOR ECCENTRICITIES, CORROSION, LOOSE FIT, DAMAGED INSULATORS ~~AND REFLECTORS~~. PAR. 57j	
11	INSPECT CANVAS ITEMS, LEATHER, AND CABLING FOR MILDEW, TEARS, AND FRAYING. PAR. 57k	
12	INSPECT FOR LOOSENESS OF ACCESSIBLE ITEMS: SWITCHES, KNOBS, JACKS, CONNECTORS, ~~ELECTRICAL TRANSFORMERS, POWERSTATS, RELAYS, SELSYNS, MOTORS, BLOWERS~~, CAPACITORS, ~~GENERATORS~~, AND PILOT LIGHT ASSEMBLIES. PAR. 57l	
13	INSPECT STORAGE BATTERIES FOR DIRT, LOOSE TERMINALS, ELECTROLYTE LEVEL AND SPECIFIC GRAVITY, AND DAMAGED CASES. PAR. 57m	
14	CLEAN ~~AIR FILTERS~~, BRASS NAME PLATES, DIAL AND METER WINDOWS, JEWEL ASSEMBLIES. PAR. 57n	
15	INSPECT METERS FOR DAMAGED GLASS AND CASES. PAR. 57o	
16	INSPECT SHELTERS AND COVERS FOR ADEQUACY OF WEATHERPROOFING. PAR. 57p	
17	CHECK ANTENNA ~~GUY WIRES~~ FOR LOOSENESS AND PROPER TENSION. PAR. 57q	
18	CHECK ~~TERMINAL~~ BOX COVERS FOR CRACKS, LEAKS, DAMAGED GASKETS, DIRT AND GREASE. PAR. 57r	
19	IF DEFICIENCIES NOTED ARE NOT CORRECTED DURING INSPECTION, INDICATE ACTION TAKEN FOR CORRECTION.	

NO.	ITEM	COND.
19	ELECTRON TUBES - INSPECT FOR ~~LOOSE ENVELOPES, GAS BOUNCE-ZORE~~, CRACKED SOCKETS: INSUFFICIENT SOCKET SPRING TENSION; CLEAN DUST AND DIRT CAREFULLY; CHECK EMISSION OF RECEIVER TYPE TUBES. PAR. 58a	
20	~~INSPECT FILM CUT-OUTS FOR LOOSE RAMPS, DIRT MISALIGNMENT AND CORROSION.~~	
21	INSPECT FIXED CAPACITORS FOR LEAKS, BULGES, AND DISCOLORATION. PAR. 58b	
22	INSPECT ~~RELAY~~ AND CIRCUIT BREAKER ASSEMBLIES FOR LOOSE MOUNTINGS; BURNED, ~~PITTED~~, CORRODED CONTACTS; MISALIGNMENT OF CONTACTS AND SPRINGS; INSUFFICIENT SPRING TENSION; BINDING OF PLUNGERS AND HINGE PARTS.	
23	INSPECT VARIABLE CAPACITORS FOR DIRT, MOISTURE, MISALIGNMENT OF PLATES, AND LOOSE MOUNTINGS. PAR. 58c	
24	INSPECT RESISTORS, BUSHINGS, AND INSULATORS, FOR CRACKS, CHIPPING, BLISTERING, DISCOLORATION AND MOISTURE. PAR. 58d	
25	INSPECT TERMINALS OF LARGE FIXED CAPACITORS AND RESISTORS FOR CORROSION, DIRT AND LOOSE CONTACTS. PAR. 58e	
26	CLEAN AND TIGHTEN SWITCHES, TERMINAL BLOCKS, ~~BLOWERS, REAR CASES~~, AND INTERIORS OF CHASSIS AND CABINETS NOT READILY ACCESSIBLE. PAR. 58f	
27	INSPECT TERMINAL BLOCKS FOR LOOSE CONNECTIONS, CRACKS AND BREAKS. PAR. 58g	
28	~~CHECK SETTINGS OF ADJUSTABLE PARTS.~~	
29	~~LUBRICATE EQUIPMENT IN ACCORDANCE WITH APPLICABLE DEPARTMENT OF THE ARMY LUBRICATION ORDER.~~	
30	INSPECT ~~GENERATORS~~, ~~AMPLIDYNES~~, DYNAMOTORS, FOR BRUSH WEAR, SPRING TENSION, ARCING, AND FITTING OF COMMUTATOR. PAR. 58h	
31	CLEAN AND TIGHTEN CONNECTIONS AND MOUNTINGS FOR TRANSFORMERS, CHOKES, POTENTIOMETERS, AND RHEOSTATS. PAR. 58i	
32	INSPECT TRANSFORMERS, CHOKES, POTENTIOMETERS, AND RHEOSTATS FOR OVERHEATING ~~AND OIL LEAKAGE~~. PAR. 58j	
33	BEFORE SHIPPING OR STORING - REMOVE BATTERIES. PAR. 58k	
34	~~INSPECT CATHODE RAY TUBES FOR BURNT SCREEN SPOTS.~~	
35	INSPECT BATTERIES FOR SHORTS AND DEAD CELLS. PAR. 58l	
36	INSPECT FOR LEAKING WATERPROOF GASKETS, WORN OR LOOSE PARTS. PAR. 58m	
37	~~MOISTURE AND FUNGIPROOF.~~	

DA FORM 1 MAY 51 11-239 REPLACES DA AGO FORM 419, 1 DEC 50, WHICH IS OBSOLETE. 16-54332-1

TM677-31

Figure 31. DA Form 11-239.

j. Inspect antenna for mechanical alinement, corrosion, loose fit, and damaged insulators.

k. Inspect compass leather carrying case for mildew.

l. Inspect each item for looseness of switches, knobs, jacks, connectors, transformers, dynamotor capacitors, and pilot light assemblies.

m. Inspect all batteries for loose connections and signs of deterioration (including the jeep storage battery when jeep-mounted).

n. Clean name plates, dials, and dial and meter windows on the receiver and the dynamotor-power supply (figs. 8 and 17).

o. Inspect meters for damaged windows and cases.

p. Inspect shelters and covers for adequacy of weatherproofing (figs. 7, 10, and 11).

q. Check antenna for looseness and proper tension at joints and connections (fig. 6).

r. Check covers of the receiver and battery cabinets for cracks, damaged gaskets, dirt, and corrosion.

58. Performing Interior Preventive Maintenance

Caution: Disconnect all power before performing the following operations. Upon completion, reconnect power and check for satisfactory operation.

a. Inspect each unit for cracked sockets and insufficient socket spring tension; *clean carefully for dust and dirt* (figs. 50, 52, 54, 56, 57, 58, 61, 63, and 64).

Caution: *Use special care* in withdrawing a miniature tube from its socket. *Do not rock or rotate* the top of a miniature tube when removing from socket—*pull straight out.* The external pin and the wire lead sealed in the glass base are two different metals which are butt-welded together where the pin appears to enter the glass. Rocking or rotating the tube causes bending which tends to break this weld or cause a resistance or intermittent joint to develop.

b. Inspect fixed capacitors in each unit for leaks, bulges, and discoloration.

c. Inspect variable capacitors for dirt, moisture, misalinement of plates, and loose mountings.

d. Inspect resistors, bushings, and insulators for cracks, chipping, blistering, discoloration, and moisture.

e. Inspect terminals of large fixed resistors and capacitors for corrosion, dirt, and loose connections.

f. Clean and tighten switches, terminal blocks, and interior of chassis not readily accessible.

g. Inspect blocks for loose connections, cracks, and breaks.

h. Inspect dynamotor (fig. 63) for brush wear, spring tension, arcing, and fitting of commutator.

i. Clean and tighten all connections and mountings for transformers, chokes, potentiometers, and rheostats.

j. Inspect transformers, chokes, potentiometers, and rheostats for overheating.

k. Before shipping or storing, remove the batteries from the dynamotor and battery cabinets (figs. 19 and 63).

l. Inspect batteries for corrosion and dead units.

m. Inspect units for leaking waterproof gaskets; also worn or loose parts.

Section III. LUBRICATION AND WEATHERPROOFING

59. General

Signal Corps equipment when operated under severe climatic conditions, such as prevail in tropical, arctic, and desert regions, requires special treatment and maintenance. Fungus growth, insects, dust, corrosion, salt spray, excessive moisture, and extreme temperatures are harmful to most materials.

60. Lubrication

Lubrication at organizational maintenance level is not required. However, the effects of extreme cold and heat on materials and lubricants are explained in TB SIG 69, Lubrication of Ground Signal Equipment. Observe all precautions outlined in TB SIG 69 and pay strict attention to all lubrication orders when operating equipment under conditions of extreme cold or heat.

61. Weatherproofing Procedures and Precautions

a. Tropical Maintenance. A special moistureproofing and fungiproofing treatment has been devised which, if properly applied, provides a reasonable degree of protection. This treatment is explained in TB SIG 13, Moistureproofing and Fungiproofing Signal Corps Equipment, and TB SIG 72, Tropical Maintenance of Ground Signal Equipment. The equipment is given the moistureproofing and fungiproofing treatment at the fac-

tory and it is necessary to use this treatment only when parts are replaced or repaired.

b. Arctic Maintenance. Special precautions necessary to prevent poor performance or total operational failures of equipment in extremely low temperatures are explained in TB SIG 66, Winter Maintenance of Signal Equipment, and TB SIG 219, Operation of Signal Corps Equipment at Low Temperatures.

c. Desert Maintenance. Special precautions necessary to prevent equipment failure in areas subject to extremely high temperatures, low humidity, and excessive sand and dust are explained in TB SIG 75, Desert Maintenance of Ground Signal Equipment.

62. Rustproofing and Painting

a. When the finish on the cabinets or tripod has become badly scarred or damaged, rust and corrosion can be prevented by touching up bared surfaces. To clean the surface down to bare metal, use #000 sandpaper, and rub until a bright smooth finish is obtained.

Caution: Do not use steel wool. Minute particles may enter the equipment and cause shorting of circuits.

b. When a touch-up job is necessary, apply paint with a small brush. Remove rust from the surface to be painted by cleaning the corroded metal with cleaning compound. In severe cases, it may be necessary to use cleaning compound to soften the rust and to use sandpaper to complete the preparation for painting. Paint used will be authorized and consistent with existing regulations.

Section IV. TROUBLESHOOTING AT ORGANIZATIONAL MAINTENANCE LEVEL

63. General

a. The troubleshooting and repairs that can be performed at the organizational maintenance level (operators and repairmen) are limited by the tools, test equipment, and replaceable parts issued, and by the existing tactical situation. Accordingly, troubleshooting is based on the performance of the equipment and the use of the senses in determining such troubles as burned-out tubes, cracked insulators, burned-out resistors, etc.

b. The paragraphs which follow in this section help in determining which of the components, such as the receiver or dynamotor, are at fault and in localizing the fault in that component to the defective stage or item, such as a tube or fuse.

64. Visual Inspection

a. Failure of the equipment to operate properly usually will be caused by one or more of the following faults:

(1) Improperly connected battery cable.
(2) Worn, broken, or disconnected cords or plugs.
(3) Burned-out fuses.
(4) Wires broken because of excessive vibration.
(5) Inactive crystals.
(6) Defective tubes (*b* below).
(7) Inspect the antenna system visually for obvious mechanical faults.

b. Recent studies of maintenance practices have disclosed that more than one-third of all electron tubes are needlessly discarded as faulty. This waste of material must be reduced through effective supply economy measures and training of repair personnel. All personnel concerned will use the information given below as a guide.

(1) Before attempting any removal of electron tubes, inspect all cabling, connections, and the general condition of the equipment.
(2) Isolate the trouble, if possible, to a particular unit or section of the equipment.
(3) If a tube tester is available, remove and test one tube at a time. Substitute new tubes only for those which are defective.
(4) If a tube tester is not available, troubleshoot by the substitution method.

(*a*) Replace the suspected tubes, one at a time, with new tubes. Note the sockets from which the original tubes were removed. If the equipment becomes operative, discard the last tube removed.

Note. Some circuits, for example the oscillator circuits using V104, V112, and V113, may function with one tube and not another—even though both tubes are new. If practicable, retain any removed tube until its condition is checked by a suitable test instrument.

(*b*) Reinsert the remaining original tubes, one at a time, in the original sockets. If equipment failure occurs during this

step, discard the last original tube. *Do not leave a new tube in a socket if the equipment operates satisfactorily with the original tube.*

(*c*) If there is an insufficient number of spare tubes, substitute a new tube for one original tube. If the equipment continues to be inoperative, replace the new tube with the original. Similarly, check each original tube, in turn, until the equipment becomes operative. Often it is possible to remove a tube from one section of the equipment without affecting the section being checked. In this case, troubleshoot the defective section using this tube as a substitute spare.

Note. If a replacement for a bad tube soon becomes defective, check the adjustment and condition of component parts of the tube circuit. In the case of the radio transmitter, also check for proper tuning. Otherwise, continued tube replacement will effect only temporary repair and more serious troubles may result.

c. If tube substitution does not correct the trouble, *reinsert the original tubes in the original sockets* before forwarding the defective equipment for higher echelon repair.

d. As a general rule, *discard* tubes when:

(1) A test in a tube tester or other instrument shows that the tube is defective.

(2) The tube defect is obvious. *For example,* the glass envelope is broken, the filament is open, or a connecting prong or lead is broken.

e. Do not discard the tubes merely because they have been used for a specified length of time. *Satisfactory operation in a circuit is the final proof of tube quality. The tube in use may work better than a new one.* It has behind it a history of satisfactory performance whereas the new tube has no reputation as an individual entity.

f. Do not discard tubes merely because they fall *on or slightly above* the minimum acceptability value when checked in a tube tester. It must be recognized that a certain percentage of new tubes fall near the low end of the acceptability range of the tube specification and, therefore, start their operational life at a value close to the tube tester *retention limit.* These tubes may provide satisfactory performance throughout a long period of operational life at this *near limit* value.

g. When failure is still encountered after checking the items given in *a* above, then a detailed examination of the component parts of the system is required. If possible, obtain information from the operator of the equipment regarding performance at the time trouble occurred.

65. System Sectionalization

a. System sectionalization consists of determining whether the trouble is in the antenna assembly, in the receiver, or in the power source (dynamotor or battery cabinet). Operate the equipment and observe its performance. Refer to the equipment performance check list (par. 66*f*) for normal operating indications.

b. If the receiver is inoperative, the trouble may be in the power source or in the connections to the power source. The power input to the receiver can be checked by the meter with the meter switch in the A, B, or C position. Check fuses at an early stage in troubleshooting. Do not repeatedly burn out fuses before checking elsewhere to determine the basic source of trouble.

c. If excessive noise or howling is present in the output, remove the antenna assembly. If removal of the antenna does not cause the noise or howling to become less pronounced or to disappear entirely, the trouble is in the receiver or the power source.

66. Troubleshooting by Using Equipment Performance Checklist

a. General. The equipment performance checklist (par. *f* below) will help the operator to locate trouble in the equipment. The list gives the item to be checked, the conditions under which the item is checked, the normal indications and tolerances of correct operation, and the corrective measures the operator can take. *To use this list, follow the items in numerical sequence.*

b. Action or Condition. For some items, the information given in the *Action or condition* column consists of various switch and control settings under which the item is to be checked. For other items, it represents an action that must be taken to check the normal indication given in the *Normal indications* column.

c. Normal Indications. The normal indications listed include the visible and audible signs that the operator should perceive when he checks the items. If the indications are not normal, the operator should apply the recommended corrective measures.

d. Corrective Measures. The corrective measures listed are those the operator can make without calling maintenance personnel. A reference in the checklist indicates that the trouble cannot be corrected during operation and that troubleshooting by an experienced repairman is necessary. If the equipment is completely inoperative or if the recommended corrective measures do not yield results, troubleshooting is necessary. However, if the tactical situation requires that direction finding operations be maintained and if the set is not completely inoperative, the operator must maintain the set in operation as long as it is possible to do so.

e. Interchangeable Tubes. Refer to the chart below. The older-type tube listed in the first column can be used interchangeably with the corresponding preferred type tube listed in the third column. The second column lists the stage or stages in which the tubes can be used interchangeably in Direction Finder Set AN/PRD–1. The older-type tube should be used until the stock is exhausted.

Older-type tube	Application	Preferred tube
6AK5	First and second rf amplifiers V101 and V102.	5654/6AK5W.
6C4	Local oscillator V104	6C4W.

f. Equipment Performance Checklist.

	Item No.	Item	Action or condition	Normal indications	Corrective measures
PREPARATORY	1	Dynamotor (if used) POWER switch (S1).	Throw to OFF position		
	2	POWER switch (S104)	Throw to OFF position		
	3	Dynamotor POWER INPUT jack (J1).	Connect to 24-volt vehicular storage battery.		
	4	LIGHT switch (S105)	Throw to OFF position		
	5	Meter switch (S109)	Turn to OFF position		
	6	AM-FM switch (S101)	Turn to AM position		
	7	AUDIO VOLUME control (R184).	Turn to extreme counterclockwise position.		
	8	BFO PITCH control (S103, C200A, and C200B).	Turn to OFF position.		
	9	DIAL ADJ. control	Turn to extreme counterclockwise position.		
	10	ANT. TRIMMER control (C157 and C158).	Turn to any position.		
	11	Function switch (S108)	Turn to MONITOR position.		
	12	SENSITIVITY control (R171).	Turn to extreme counterclockwise position.		
START	13	POWER switch (S104)	Turn to ON position	Tuning dial light (I 101) goes on.	Check I 101. Check voltages.
	14	Dynamotor POWER switch (S1).	Turn to ON position	Indicator (I 1) goes on	Check I 1, F1, RT1, and power cable connections.
	15	LIGHT switch (S105)	Turn to ON position	Panel light (I 102) goes on.	Check voltages. Replace I 102.
EQUIPMENT PERFORMANCE	16	AUDIO VOLUME control (R184).	Turn clockwise	Rushing noise in headset	
	17	SENSITIVITY control (R171).	Turn clockwise, but not to AVC.	Increased volume in headset.	On band 2, check V105, V106, V107, and V111. On other bands, check V109, V110, and V111.
			Place on AVC position	Amplitude of different signals approximately constant.	Check switch S106.

	Item No.	Item	Action or condition	Normal indications	Corrective measures
EQUIPMENT PERFORMANCE	18	Meter switch (S109)	Turn to A position (1.5 volts filament).	Meter is at or above red line.	If the battery cabinet is used, check batteries. If the dynamotor is used, check S1, connections to storage battery, and J302 and J303 contacts.
			Turn to B position (B supply).	Meter is at or above red line.	Same as for A position.
			Turn to C position (6.3 volts filament).	Meter is at or above red line.	Same as for A position.
			Turn to IND position	Meter indicates signal level.	Check V102.
	19	METER ADJ	Vary	Meter needle moves	
	20	Function switch (S108)	Turn to CAL position. Calibrate receiver as directed in paragraph 41*b*.	Crystal calibrator output indicated on meter.	Check V112.
			Turn to df position	Signals heard in MONITOR position are heard in df position.	Check V108.
			Operate using WHITE and RED positions as directed in paragraph 42*a*.	Readings as given in paragraph 42*a*.	Check V108.
	21	BAND SWITCH (S107)	Turn to all bands	Correct calibration dial scale shows in shutter plate window.	Check for looseness of knob set screws or loose set screws on connecting rod between BAND SWITCH and switch in bfo and CAL chassis.
	22	Main tuning control	Loosen dial locking screw. Rotate control.	TUNING dial scale moves.	Check dial locking screw.
	23	Vernier tuning control	Rotate	TUNING dial scale moves *slightly*.	
	24	ANT. TRIMMER control.	Rotate	Variation in meter reading.	Check for loose knob or loose setscrews on end of flexible shaft on control.
	25	DIAL ADJ. control	Rotate	Indicator pointer on TUNING dial moves.	Check for loose knob or setscrew.
	26	AM-FM switch (S101)	Keep in AM position	Voice, cw, and icw signals heard in headset.	Refer to item 20.
			Place in FM position. Be sure BAND SWITCH is on BAND 7.	Rushing noise heard. Signals received when tuned.	Refer to paragraph 67.
	27	BFO PITCH control (S103, C200A/B).	After tuning in signal, vary this control.	Changing pitch heard in headset.	Check V113.
STOP	28	LIGHT switch (S105)	Turn to OFF position	Panel light (I 102) goes out.	
	29	POWER switch (S104)	Turn to OFF position	TUNING dial light (I 101) goes out.	
	30	Dynamotor POWER switch (S1).	Turn to OFF position	Indicator (I 1) goes out	
	31	OUTPUT jack (J103)	Disconnect headset		
	32	Dynamotor POWER INPUT jack (J1).	Disconnect power cable		

67. General Localization Techniques

By noting the meter and aural indications as the band and function switches are placed in different positions, an operator can deduce what stage or stages of the receiver are operating properly; then he can change tubes or crystals in the remaining stages. Detailed information is given in *a*, *b*, and *c* below.

Note. Rotate the antenna, the main tuning control, and the SENSITIVITY control for maximum visual and aural indications.

a. If a rushing noise is heard in the headset with the BAND SWITCH on BAND 1, the 455-kc if amplifiers, the am detector, and the audio amplifiers are in good condition. If the rushing noise is heard when the BAND SWITCH is turned to BAND 7 and the AM-FM switch is turned to FM, the if amplifiers in the fm circuit are also in good condition. Look for trouble in V101, V102, V103, and V104.

b. If a signal is received on all bands except band 2, the rf stages, the 455-kc if amplifiers, the am detector, and the audio amplifiers are good. If, in addition, the signal is received on band 2, the 1,610-kc if amplifiers also are in good condition. Look for trouble in V108 or V112. Reception of the signal with the function switch in the MONITOR position proves V108 to be in satisfactory condition.

c. If no signal is received on any band, place the function switch on the CAL position, the BFO PITCH control to the 0 position, and tune the receiver to a calibrating point in band 1.

(1) If nothing is heard in the headset, but a visual indication is obtained on the meter (with the meter switch in the IND position), check tubes V111, V114, and V115.

(2) If no visual or aural indication is obtained on band 1, 100-kc crystal Y103 or calibrator oscillator tube V112 is at fault. Switch to band 4 or band 6; if a visual meter indication is obtained, the calibrator oscillator is functioning properly. Replace crystal Y103.

(3) If no visual or aural indication is obtained on band 4, but a visual indication is obtained on bands 1 and 6, replace 1.3-mc crystal Y102.

(4) If no visual or aural indication is obtained on band 6, but a visual indication is obtained on bands 1 and 4, replace 4-mc crystal Y101.

(5) If no visual or aural indication is obtained on any band, replace calibrator oscillator tube V112.

CHAPTER 5

THEORY

Section I. THEORY OF RADIO RECEIVER R–395/PRD–1

68. Block Diagram

Radio Receiver R–395/PRD–1 is a 15-tube superheterodyne receiver operating in seven overlapping bands over a 100-kc to 30-mc frequency range (par. 7). The unit is designed to receive am, cw, and icw signals throughout the 100-kc to 30-mc frequency range; and to receive fm signals only in the 12.5 to 30-mc frequency range. The block diagram of Radio Receiver R–395/PRD–1 (fig. 32) contains the following sections (stages):

Sense amplifier (V108).
First rf amplifier (V101).
Second rf amplifier (V102).
Crystal calibrator oscillator (V112).
Local oscillator (V104).
Mixer (V103).
455-kc am if first and second amplifiers (V109 and V110), used for cw, icw, and am reception on bands 1, 3, 4, 5, 6, and 7.
1,610-kc am if first, second, and third amplifiers (V105, V106, and V107), used for am reception on band 2 only.
455-kc fm if first, second, and third amplifiers (V105, V106, and V107), used for fm reception on band 7 only.
455-kc fm discriminator (CR102 and CR103).
Beat-frequency oscillator (V113).
Detector (V111).
First audio amplifier (V114)
Audio output amplifier (V115).

69. Signal Paths

(fig. 32)

a. Rf Stages. The nondirectional signal input from the sense antenna is coupled to sense amplifier V108. The sense amplifier increases this signal in strength and couples it to first rf amplifier V101. The directional signal pickup of the loop antenna is also fed into V101. This signal is out of phase with the signal from the sense amplifier. The output of V101 is composed of the vector sum of the loop and sense signals; this combined rf signal is amplified in second rf amplifier V102 and then fed to mixer V103. The tuned output of local oscillator V104 is also fed into the mixer. The output circuit of the mixer is tuned to the algebraic difference of the incoming signals from the second rf amplifier and the local oscillator. This tuned frequency is the intermediate frequency. Rf amplifiers V101 and V102 and local oscillator V104 each have separate tuned input circuits for each of the seven bands.

b. If. Stages. For am operation on all bands (except band 2) the if. signal has a frequency of 455 kc and passes through if amplifiers V109 and V110. For am operation on band 2 (220 kc to 520 kc), the if. signal has a frequency of 1,610 kc and passes through if. amplifiers V105, V106, and V107. For fm operation (which takes place on band 7 only; 12.5 mc to 30 mc) the if. signal has a frequency of 455 kc and passes through if. amplifiers V105, V106, and V107.

c. Audio Stages. The am if. output of V107 or V110 is coupled to detector V111 and the fm if. output from V107 is fed into the discriminator circuit (CR102 and CR103). Either one of these outputs (par. *b* above) is fed into first audio amplifier V114. When the receiver is used for cw operation, beat-frequency oscillator (bfo) V113 is turned on. The output of the bfo is fed to detector V111 which detects the audio tone signal. This tone signal is the difference in frequencies between the if. signal and the bfo output. First audio amplifier V114 amplifies the low-level audio signal output from the detector or the discriminator circuit. The output of V114 is fed to audio output amplifier V115 which amplifies the signal and is made audible in a headset connected to the output of V115.

d. Calibrator Signal Path. To calibrate the receiver, crystal calibrator oscillator V112 is used. The crystal calibrator oscillator provides outputs at 100-kc intervals on bands 1, 2, and 3; 1.3-mc intervals on bands 4 and 5; and 4-mc intervals on bands 6 and 7. This output is coupled to the input of first rf amplifier V101 for calibration purposes.

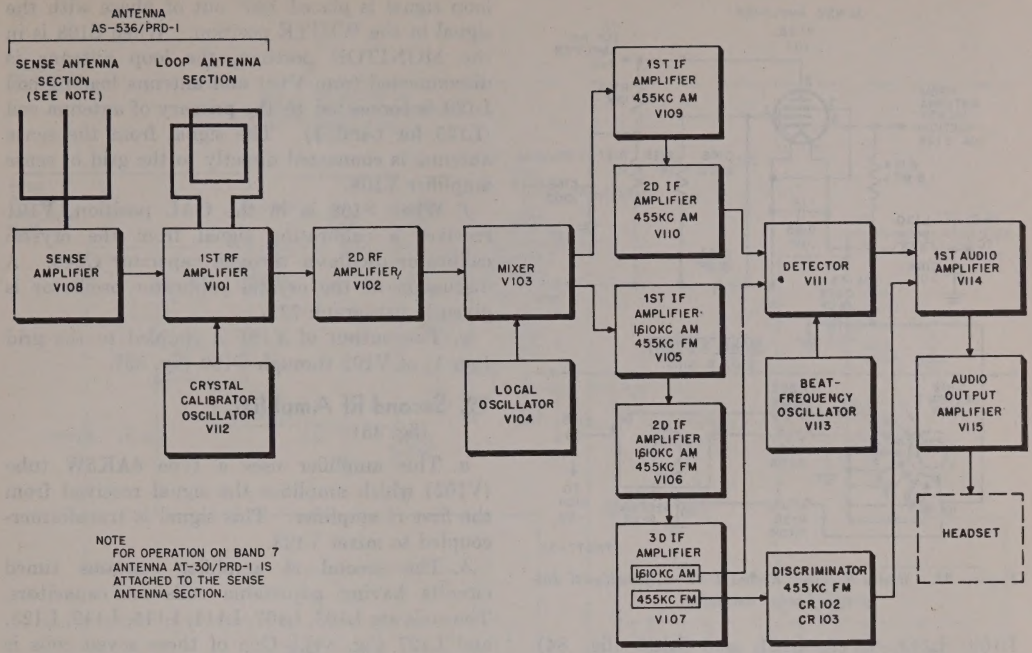

Figure 32. Radio Receiver R–395/PRD–1, block diagram.

Section II. STAGE-BY-STAGE ANALYSIS OF RADIO RECEIVER R–395/PRD–1

70. Sense Amplifier

(fig. 33)

a. The sense amplifier is an untuned RF amplifier that uses a type 1U4 tube (V108). This tube amplifies the nondirectional rf signal picked up in the sense antenna.

b. The nondirectional signal picked up by the vertical sense antenna is fed to the untuned grid circuit of V108 through J101 (fig. 84) and function switch S108 when the switch is in the MONITOR, WHITE, or RED position. For operation on band 7, the vertical sense antenna section of Antenna AS–536/PRD–1 is lengthened by the addition of Antenna AT–301/PRD–1.

c. Plate voltage is applied through a decoupling network consisting of R127, C168, and plate load resistor R126. Screen voltage is applied through resistor R125; capacitor C167 is the bypass for the B+ line. The screen bypass capacitor is C166. Rf voltage variations in the filament circuit are removed by a filter network consisting of C164, L130, and C165. The grid return resistor is R124; the grid decoupling capacitor is C279. Resistors R198, R200, and R201 constitute a voltage divider on the control grid of V108 for bands 1 and 2 only. This voltage divider limits the gain of these two bands.

d. The amplified signal output of V108 is coupled through C160 (fig. 4) to the control grid (pin 1) of first rf amplifier V101.

71. First Rf Amplifier

(fig. 34)

a. This amplifier uses a type 6AK5W tube (V101) and amplifies the directional and nondirectional rf signals received from the loop antenna (loop sec.) and sense amplifier V108. The output of V101 is transformer-coupled to second rf amplifier V102.

b. The first rf amplifier contains tuned circuits having adjustable coils and capacitors. The antenna tuning capacitors are C149 and C150 and the antenna trimmer capacitors are C157 and C158. The antenna coils are L101, L105,

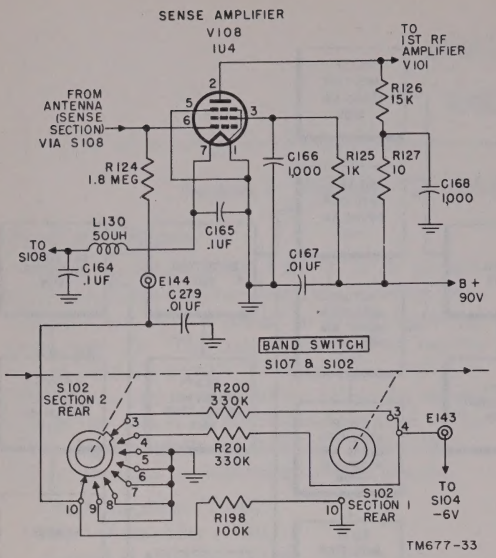

Figure 33. Radio Receiver R–395/PRD–1, functional diagram of sense amplifier.

L109, L113, L117, L121, and L125 (fig. 84). One of these seven coils is used for each of the seven bands of operation and the coils are connected one at a time by BAND SWITCH S107 to the circuit. The first rf tuning capacitors are C151 and C152.

c. Plate voltage for V101 is applied through resistor R123 and the primary winding of rf coil L126 (band 1). Resistor R115 is the first rf coil primary damping resistor and C138 is the primary loading capacitor for band 1. On the secondary side of L126, C139 is a fixed shunt capacitor, C140 is a variable trimmer, and R116 and R117 are damping resistors, all for band 1. Similar circuits are associated with each of the other bands (fig. 84).

d. Screen voltage for V101 is applied directly through R123 with C163 as the screen bypass capacitor. Grid coupling from the sense and loop antennas is provided by C159 and C160; grid decoupling by C161 and C246. Grid return resistors R121, R122, and R199 are the control grid bias voltage divider. The grid resistor is R121 and the heater bypass capacitor is C162.

e. The signal picked up by the loop antenna is fed to the tuned input circuit of V101 when function switch S108 is in the DF, WHITE, or RED position. When S108 is in the RED position, the loop signal is placed 180° out of phase with the signal in the WHITE position. When S108 is in the MONITOR position, the loop antenna is disconnected from V101 and antenna loading coil L129 is connected to the primary of antenna coil (L125 for band 1). The signal from the sense antenna is connected directly to the grid of sense amplifier V108.

f. When S108 is in the CAL position, V101 receives a calibrating signal from the crystal calibrator oscillator through capacitor C248. A discussion of the crystal calibrator oscillator is given in paragraph 73.

g. The output of V101 is coupled to the grid (pin 1) of V102 through C169 (fig. 35).

72. Second Rf Amplifier
(fig. 35)

a. This amplifier uses a type 6AK5W tube (V102) which amplifies the signal received from the first rf amplifier. This signal is transformer-coupled to mixer V103.

b. The second rf amplifier contains tuned circuits having adjustable coils and capacitors. The coils are L103, L107, L111, L115, L119, L123, and L127 (fig. 84). One of these seven coils is used for each of the seven bands of operation and the coils are connected one at a time by BAND SWITCH S107 to the circuit involved. The second rf tuning capacitors are C153 and C154. They are ganged to C149, C150, C151, and C152 (fig. 84).

c. Plate voltage for V102 is supplied through resistor R130 and the primary winding of rf coil L127 (band 1). The resistor R118 is the second rf coil primary damping resistor for band 1, and C141 is the primary loading capacitor. On the secondary side of L127, C143 is a fixed shunt capacitor, C142 is a variable trimmer, and R119 and R120 are damping resistors, all for band 1. Similar circuits are associated with each of the other bands (fig. 84).

d. Screen voltage for V102 is applied directly through R130. The screen bypass capacitor is C172, and C173 is the screen decoupling capacitor. Grid coupling is provided by C169, and decoupling by C170. Resistor R128 is the grid return resistor and R129 is a grid decoupling resistor. The automatic volume control (avc) bypass capacitor is C278. The heater bypass capacitor is C171 and L131 is the heater choke.

e. When the receiver is operated in the manual position, the grid bias voltage to the first rf

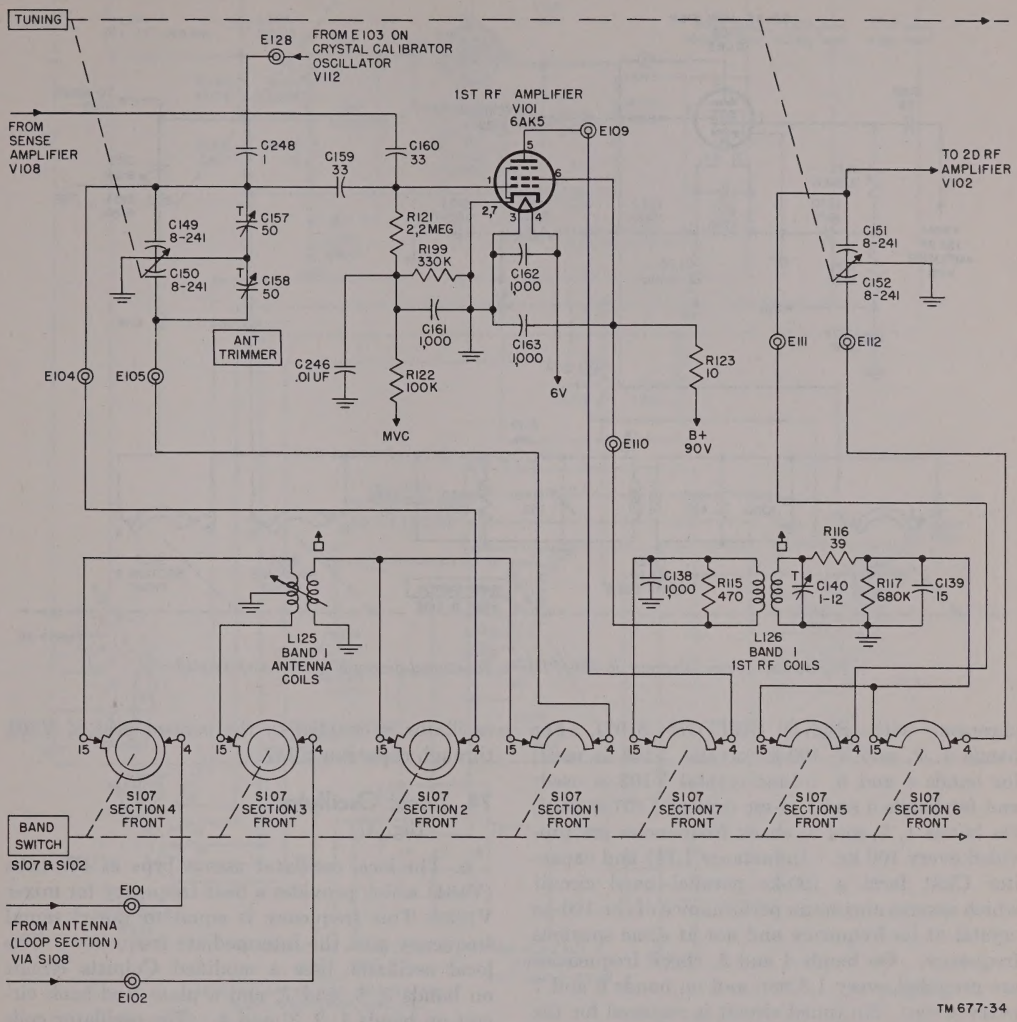

Figure 34. Radio Receiver R–395/PRD–1, functional diagram of first rf amplifier.

amplifier is manually controlled by varying SENSITIVITY control R171. When the receiver is operated in the AVC position, avc rectifier CR101 automatically feeds back a controlling bias voltage into the grid circuits of V101, V102, and the signal grid of mixer V103. The output of V102 is transformer-coupled to the signal grid of the mixer.

73. Crystal Calibrator Oscillator
(fig. 36)

a. This calibrator oscillator uses a type 1U4 tube (V112) that provides an accurate frequency output which is fed to the first rf amplifier for checking the tuning dial calibration. The circuit uses three crystals (Y103, Y102, and Y101) which are switched by BAND SWITCH S102 (in syn-

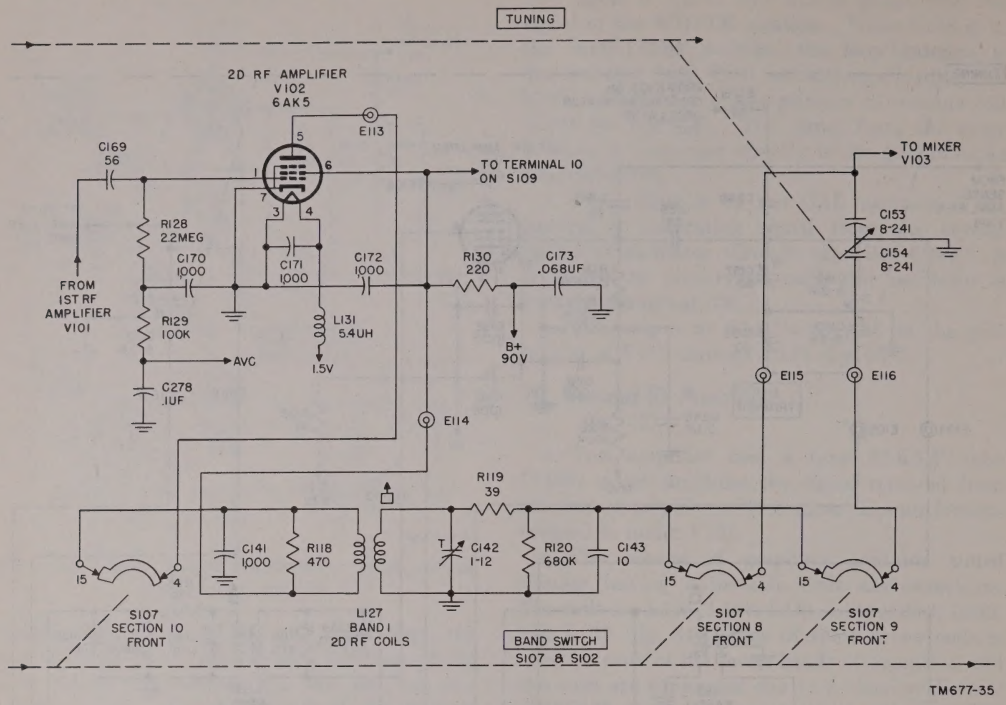

Figure 35. Radio Receiver R-395/PRD-1, functional diagram of second rf amplifier.

chronism with BAND SWITCH S107). For bands 1, 2, and 3, 100-kc crystal Y103 is used; for bands 4 and 5, 1.3-mc crystal Y102 is used; and for bands 6 and 7, 4-mc crystal Y101 is used. On bands 1, 2, and 3, check frequencies are provided every 100 kc. Inductance L141 and capacitor C281 form a 100-kc parallel-tuned circuit which assures maximum performance of the 100-kc crystal at its frequency and not at some spurious frequency. On bands 4 and 5, check frequencies are provided every 1.3 mc; and on bands 6 and 7 every 4 mc. No tuned circuit is required for the 1.3 mc and 4 mc crystals.

b. The crystal calibrator oscillator uses a Pierce oscillator circuit. Plate voltage is applied through R140 and R142. Screen voltage is applied through R141 and R142. Capacitors C188 and C189 are the plate and screen decoupling capacitors. The screen bypass capacitor is C190. Resistors R143, R144, and R145 are grid resistors. The grid leak capacitor is C192. The filament bypass capacitor is C191. The output of the oscillator is coupled to the control grid of V101 through capacitor C187.

74. Local Oscillator

(fig. 37)

a. The local oscillator uses a type 6C4W tube (V104) which provides a beat frequency for mixer V103. This frequency is equal to the rf signal frequency plus the intermediate frequency. The local oscillator uses a modified Colpitts circuit on bands 5, 6, and 7, and a plate feed-back circuit on bands 1, 2, 3, and 4. The oscillator coils are L104, L108, L112, L116, L120, L124, and L128. One of these coils is used for each of the seven bands of operation and are connected one at a time by BAND SWITCH S107 to the circuit involved. Associated with the coils (band 1) are fixed padder capacitor C145, variable padder capacitor C146, B+ bypass capacitor C144, fixed trimmer capacitor C148 and variable trimmer capacitor C147. Similar padder, trimmer, and

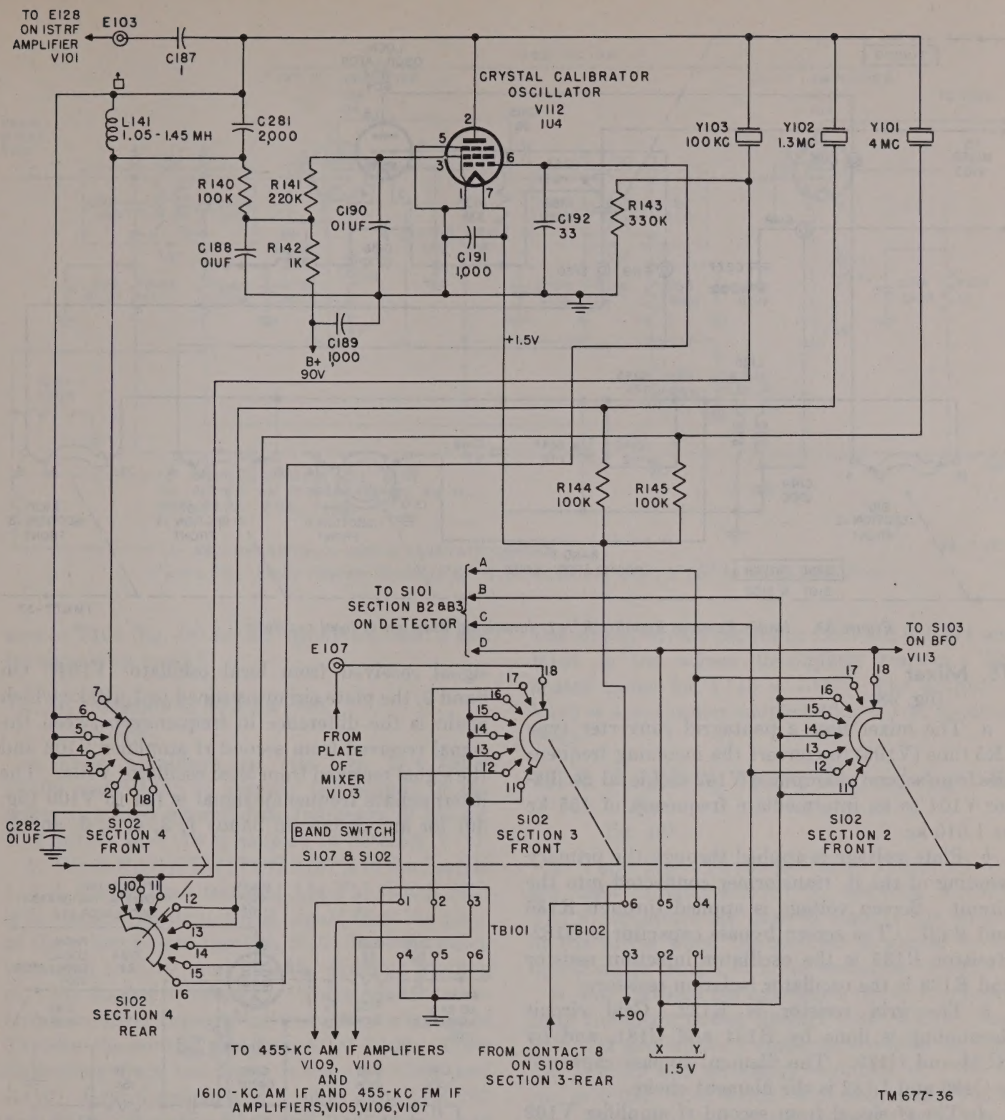

Figure 36. Radio Receiver R-395/PRD-1, functional diagram of crystal calibrator oscillator.

bypass capacitors are associated with each of the coils for the other bands (fig. 84).

b. Tuning capacitors C155 and C156 are ganged to the TUNING dial so that the rf stages (pars. 69 and 70) and the local oscillator are tuned simultaneously. Grid coupling is provided by C185. The grid resistor is R139. The heater bypass capacitor is C186 and the heater choke is L133. The oscillator plate decoupling resistor is R138 and C183 is the oscillator plate decoupling capacitor.

c. The output of V104 is coupled to the first control grid (pin 4) of the mixer (V103) through capacitor C184 (fig. 38). On bands 1, 3, 4, 5, 6, and 7, the frequency output of the local oscillator is 455 kc higher than that of the rf signal. On band 2, the frequency output of the local oscillator is 1,610 kc higher than that of the rf signal.

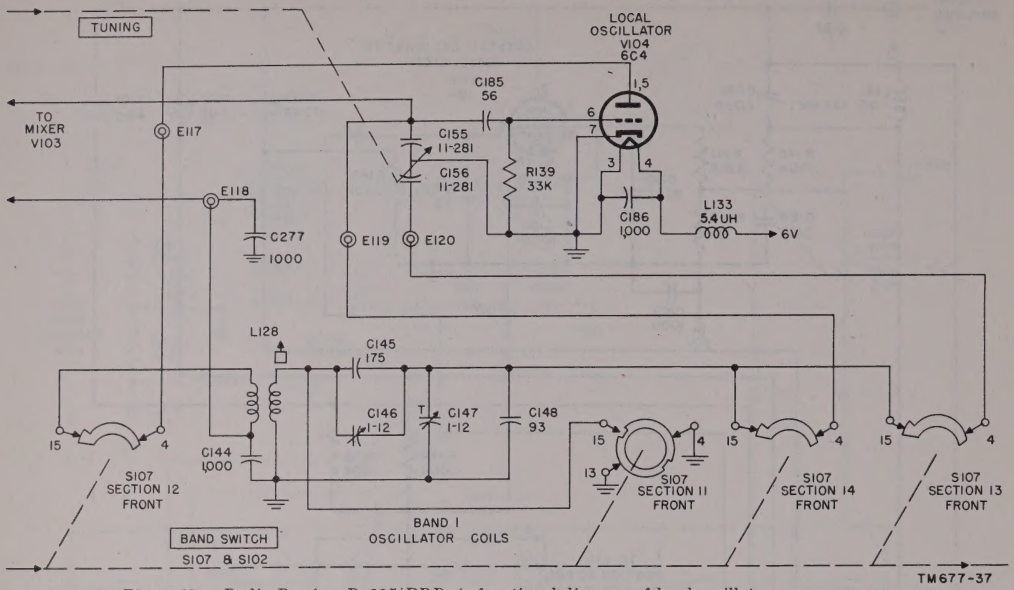

Figure 37. Radio Receiver R-395/PRD-1, functional diagram of local oscillator.

75. Mixer

(fig. 38)

a. The mixer uses a pentagrid converter type 1R5 tube (V103) to convert the incoming frequencies from second rf amplifier V102 and local oscillator V104 to an intermediate frequency of 455 kc or 1,610 kc.

b. Plate voltage is applied through the primary winding of the if. transformer connected into the circuit. Screen voltage is applied through R136 and R137. The screen bypass capacitor is C182. Resistor R135 is the oscillator injection resistor and R138 is the oscillator isolation resistor.

c. The grid resistor is R132. Grid circuit decoupling is done by R134 and C181, and by R133 and C179. The filament bypass capacitor is C180 and L132 is the filament choke.

d. The rf signal from second rf amplifier V102 is fed through coupling capacitor C178 and parasitic suppressor grid resistor R131 to the signal grid (pin 6) of V103. The output of local oscillator V104 is fed through injection capacitor C184 to the first control grid (pin 4) of V103. The plate circuit of V103 is a tuned inductance-capacitance (LC) circuit. On bands 1, 3, 4, 5, 6, and 7, the plate circuit is tuned to 455 kc which is the difference in frequency between the signal received from second rf amplifier V102 and the signal received from local oscillator V104. On band 2, the plate circuit is tuned to 1,610 kc which again is the difference in frequency between the signal received from second rf amplifier V102 and the signal received from local oscillator V104. The intermediate frequency signal is fed to V109 (fig. 39) for am signals on bands 1, 3, 4, 5, 6, and 7;

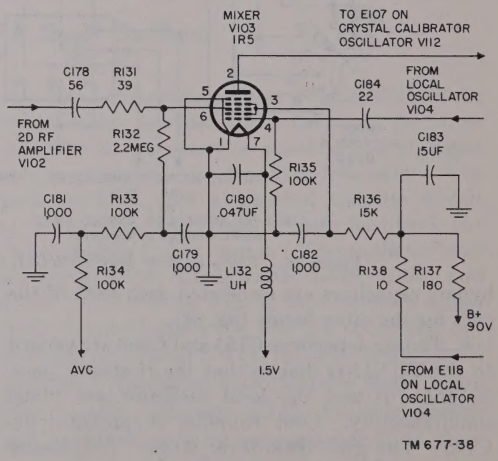

Figure 38. Radio Receiver R-395/PRD-1, functional diagram of mixer.

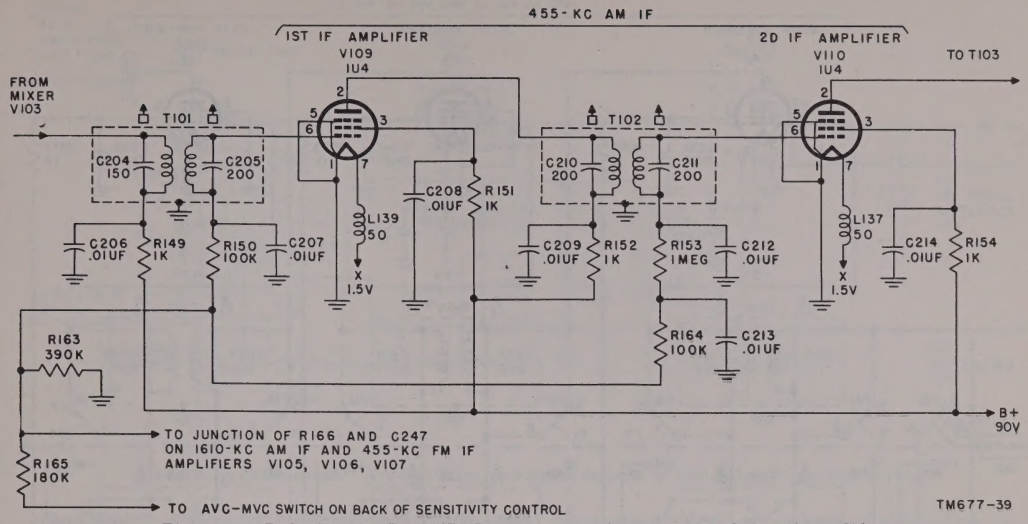

Figure 39. Radio Receiver R-395/PRD-1, functional diagram of 455-kc am if. amplifiers.

and to V105 (fig. 40) for am signals on band 2 and fm signals on band 7.

76. If. Amplifiers, 455-Kc Am (fig. 39)

a. These amplifiers use two type 1U4 tubes (V109 and V110) to amplify the output of the mixer at a fixed intermediate frequency of 455 kc. The output of V110 is coupled to detector V111.

b. When BAND SWITCH S107 is in the BAND 1, 3, 4, 5, 6, or 7 position and AM-FM switch S101 is in the AM position, the if. signal from the plate of the mixer passes through S102 (fig. 84), which is ganged to S107, and into the primary winding of T101 (tuned to 455 kc). The signal is transformer-coupled through the secondary winding of T101 to the control grid (pin 6) of V109. Plate decoupling from the mixer is done by C206 and R149. Grid decoupling of V109 is done by C207 and R150. Resistors R163 and R165 form a grid bias voltage divider. Capacitor C208 is the screen bypass capacitor for V109 and R151 is the screen decoupling resistor. The heater choke for V109 is L139.

c. After being amplified in V109, the signal is again transformer-coupled through the primary and secondary winding of T102 to the control grid (pin 6) of V110. Plate decoupling for V109 is done by C209 and R152. Grid decoupling of V110 is done by C212, C213, R153, and R164. The screen bypass capacitor for V110 is C214 and R154 is the screen decoupling resistor. The heater choke for V110 is L137. The output of V110 is transformer-coupled (fig. 43) to detector V111.

77. If. Amplifiers, 455-Kc Fm, and 1,610-Kc Am (fig. 40)

a. Three type 1U4 tubes, V105, V106, and V107, are used in conventional if. amplifier circuits. The if. amplifiers are used to amplify the output of the mixer when the receiver is placed in am operation on band 2 or in fm operation on band 7.

b. For 1,610-kc am operation, the if. frequency from the mixer passes through S102, TB101, and S101–D2 and is then transformer-coupled through the primary and secondary windings of T104 to the grid (pin 6) of V105. The output of V105 is then transformer-coupled through T106 to V106, and the output of V106 is transformer-coupled through T108 to V107. The am output of V107 is transformer-coupled through T110 (fig. 43) to detector V111 for the 1,610-kc am operation.

c. For 455-kc fm operation, the if. path is similar to that described in *b* above except that transformers T105, T107, and T109 provide the interstage coupling. The fm output of V107 is transformer-coupled through T111 (fig. 41) to the 455-kc fm discriminator circuit.

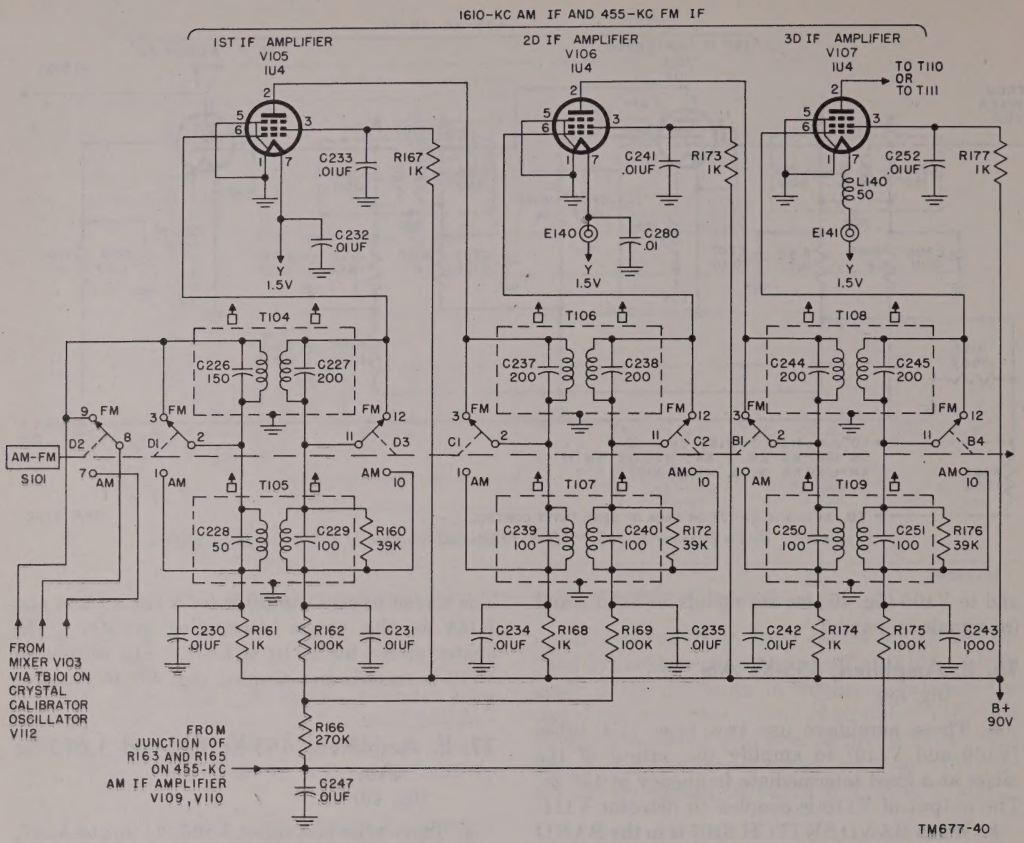

Figure 40. Radio Receiver R-395/PRD-1, functional diagram of 455-kc fm and 1,610-kc am if. amplifiers.

d. Associated with V105 are grid and plate decoupling circuits, with R162 and C231 being used for grid decoupling, and R168 and C234 for plate decoupling. The screen bypass capacitor is C233 and the decoupling resistor is R167. The filament bypass capacitor is C232. Additional decoupling in the grid circuits is provided by R166 and C247. Capacitor C230 and resistor R161 are used for plate decoupling of mixer V103.

e. Figure 40 shows grid, plate, and screen circuits similar to those described in *d* above associated with V106 and V107.

78. Discriminator, 455-kc fm

(fig. 41)

a. The discriminator circuit converts the fm if. radio frequency signal into an audio signal. The audio signal is coupled from the discriminator to first audio amplifier V114.

b. A Foster-Seeley discriminator circuit provides an audio frequency output from a frequency modulated input signal. Third if. transformer T111 has the primary and secondary windings both tuned (by C259 and C260) to 455 kc. A voltage out of phase with transformer-coupled voltage is injected through capacitor C254 which has a low reactance to 455 kc. Capacitor C254 is connected to a center tap on the secondary winding of T111. There are now two voltages that cause current to flow in germanium crystals CR102 and CR103 and through resistors R180 and R181. One voltage is due to the induced voltage through the mutual inductance in T111; the other voltage is due to the capacitive coupling of C254. Capacitors C255 and C256 are used as load filters.

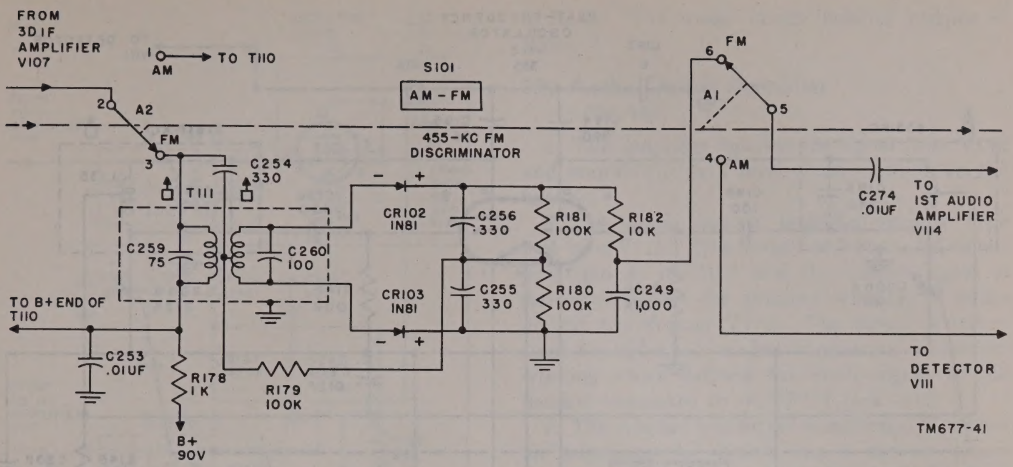

Figure 41. Radio Receiver R-395/PRD-1, functional diagram of 455-kc fm discriminator circuit.

c. The two voltages mentioned in *b* above are out of phase by 90° at center frequency. The phase difference between the voltages depends upon the frequency of the if. signal. As a result of this difference, the voltage which is coupled to first audio amplifier V114, is dependent upon the frequency variations from the 455-kc intermediate frequency. These frequency variations are at an audio rate and represent the modulating portion of the fm signal which now has been converted into audio voltage variations.

d. Capacitor C249 and resistor R182 are used for fm de-emphasis. Capacitor C253 and resistor R178 serve as plate decoupling for V107. Resistor R179 and capacitor C254 form the phase shifting network. The output of the discriminator is coupled to first audio amplifier V114 through section A1 of AM-FM switch S101 and capacitor C274.

79. Beat-Frequency Oscillator

(fig. 42)

a. The bfo circuit is used for reception of cw code signals; for location of weak signals of any kind; and as an aid in obtaining the null position of the loop in df operation. The output of the bfo is mixed with the if. signal in detector V111 to produce an audio signal in the output of the detector.

b. Bfo tube V113 is a type 3A5 twin triode. Each triode section has a tuned circuit in a modified Hartley oscillator. When BFO PITCH control switch S103 is in the ON position, the filaments of V113 are energized depending upon the setting of BAND SWITCH S107. By means of switch S102, which is ganged to BAND SWITCH S107, either the 455-kc or the 1,610-kc oscillator circuit is placed in operation.

c. For 455-kc operation, L134 and C196 comprise the tuned circuit. BFO PITCH control C200A is in series with the tuned circuit; it varies the oscillating frequency of the bfo approximately ±5kc of the center frequency. This varying frequency changes the audio pitch heard in the headset when the bfo is in operation. Capacitors C194 and C221 (fig. 43) couple the 455-kc bfo output to detector V111.

d. For 1,610-kc operation, L135 and C197 comprise the tuned circuit. BFO PITCH control C200B operates the same as C200A (par. *c* above). Capacitors C195 and C222 (fig. 43) couple the 1,610-kc bfo output to detector V111.

e. Plate decoupling of V113 is done by R148 and C201. Grid coupling is performed by C198 and C199, grid resistors R146 and R147, and of bypass capacitor C202. The filament bypass capacitor is C203, and the filament choke is L136. The signal output voltage dividing capacitor is C193.

80. Detector

(fig. 43)

a. Detector V111 removes the audio variations in the am if. signal. The audio portion of the signal is transferred to first audio amplifier V114.

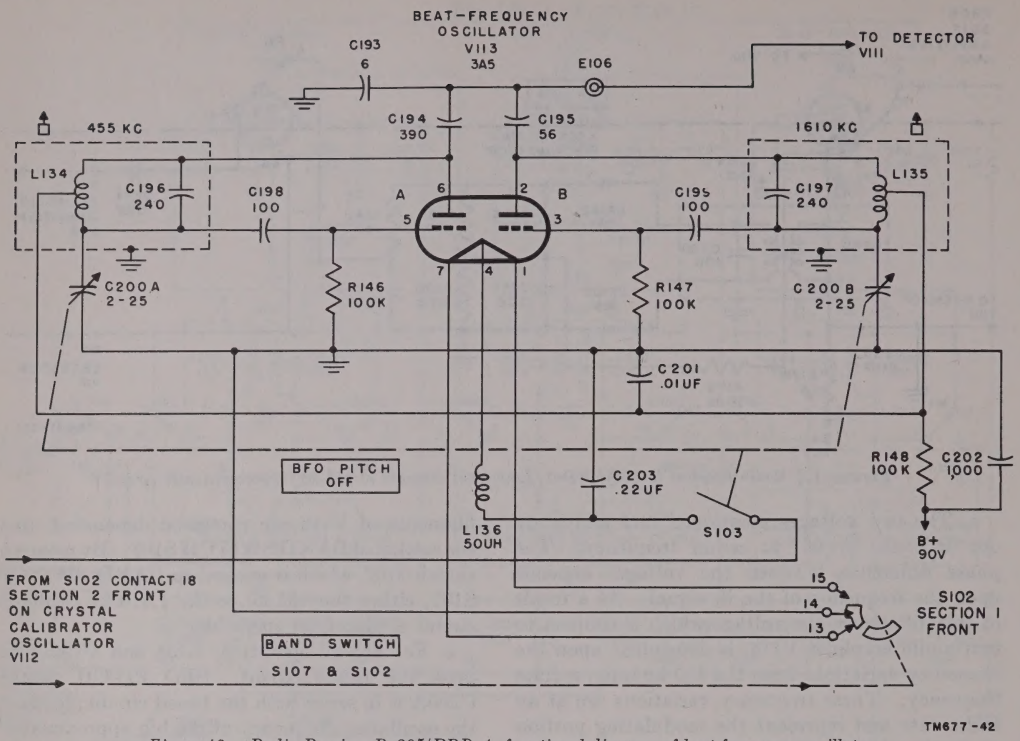

Figure 42. Radio Receiver R-395/PRD-1, functional diagram of beat-frequency oscillator.

b. The detector uses a type 1U5 diode pentode tube (V111). The diode section is used as the detector for the 455-kc am if. signal; the pentode section is connected as a diode (plate, screen, and grid tied together) detector for the 1,610-kc if. signal.

c. The 455-kc am if. signal from V110 is transformer-coupled through T103 (C217 and C218 serving as tuning capacitors) to the diode section (pin 4) of V111. Capacitor C215 and resistor R155 are used for plate decoupling of V110. The bypass filter network for the 455-kc am if. circuit consists of C219, C220, and R146.

d. The 1,610-kc am if. signal from V107 is transformer-coupled through T110 (C257 and C258 serving as tuning capacitors) to the diode-connected section (pins 2, 3, 6) of V111. The bypass filter network for the 1,610-kc am if. circuit consists of C275, C220, and R183.

e. The audio frequency voltage developed across load resistor R157 is coupled to the first audio amplifier through section A1 of AM-FM switch S101 and capacitor C274. The filament choke is L138.

81. First Audio Amplifier

(fig. 44)

a. This audio amplifier is used to amplify the low-level audio signal from the am detector or the fm discriminator.

b. The first audio amplifier uses a type 1U5 tube V114. The audio voltages from the detector or discriminator are fed to the grid (pin 6) of V114 through AUDIO VOLUME control R184. The setting of R184 determines the amount of signal which enters on the grid. The amplified signal is developed across plate load resistor R186. The output signal is coupled through C262 to audio output amplifier V115.

c. Plate bypass capacitor C265 serves to keep intermediate frequencies out of the audio system. The screen bypass capacitor is C261. The plate load resistor is R186; the screen dropping resistor

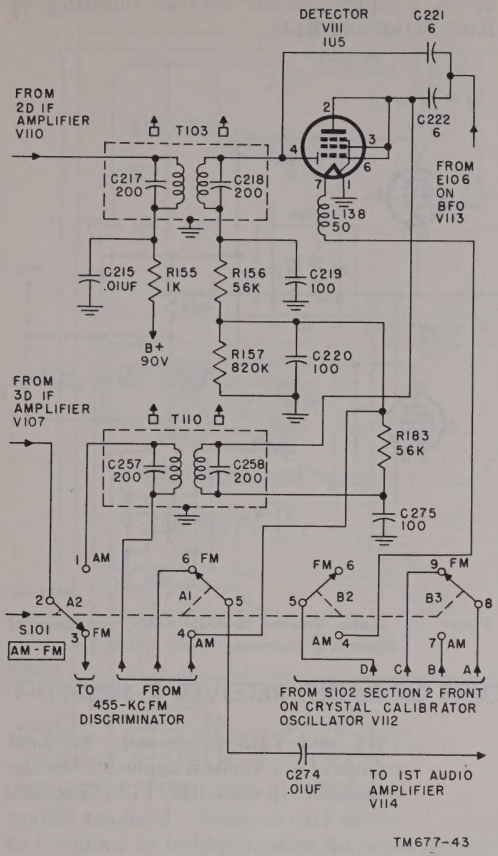

Figure 43. Radio Receiver R-395/PRD-1, functional diagram of detector.

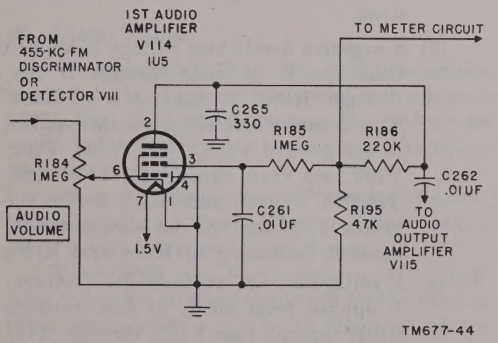

Figure 44. Radio Receiver R-395/PRD-1, functional diagram of first audio amplifier.

is R185. The meter bridge balance resistor is R195.

82. Audio Output Amplifier

(fig. 45)

a. This amplifier receives the signal from V114 and amplifies it to a level clearly audible in the headset.

b. The audio output amplifier uses a type 3Q4 tube V115. The output of V114 is fed to the grid (pin 3) of V115 and the output signal is developed across the primary winding of audio output transformer T112. The signal is transformer-coupled to a low-impedance secondary winding which delivers the audio signal to the headset connected to OUTPUT jack J103.

c. The primary winding of transformer T112 has an impedance of 10,000 ohms; the secondary winding has an impedance of 600 ohms. A fixed negative bias (−5 volts) is obtained from the voltage divider consisting of R188 and R189. The grid resistor is R187; the grid decoupler is C263. The plate bypass capacitor is C264; plate decoupling is done by C276 and R196.

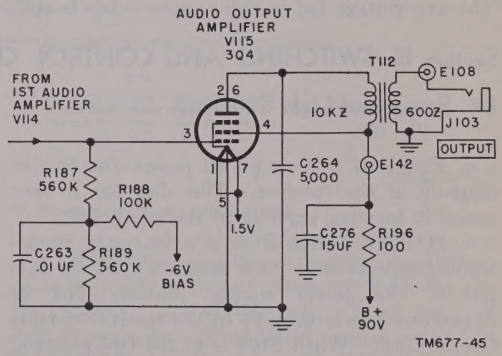

Figure 45. Radio Receiver R-395/PRD-1, functional diagram of audio output amplifier.

83. Automatic Volume Control

(fig. 46)

a. This avc circuit is incorporated in the receiver to maintain a constant signal level in the headset with input signals to the receiver having varying levels. The principal operation of this circuit is to feed back a negative voltage to the inputs of rf amplifiers V101 and V102, mixer V103 and if. amplifiers V109, V110, V105, V106,

and V107 to maintain the grid bias voltage proportional to the strength of the incoming signals.

b. The avc circuit uses a germanium crystal type IN81 (CR101) for rectification purposes. The input to the circuit comes either from second 455-kc am if. amplifier V110, through C216, or from third 1,610-kc am and 455-kc fm if. amplifier V107, through C225. When the signal is strong enough for current to flow through crystal CR101, a voltage drop is produced across avc load resistor R159, the polarity of which is then such that tbe ground side of R159 is positive. Capacitors C223 and C224 bypass the audio components of the if. signal to ground so that the voltage developed across R159 is dependent upon the strength of the carrier wave. The developed voltage is the negative avc voltage which is coupled to the input grid circuit of the rf amplifiers, mixer, and if. amplifiers.

c. When the signal strength increases, the voltage developed across R159 will also increase and cause an increased negative voltage to appear in the input grid circuits (*b* above). This negative voltage increases the bias which limits the signal outputs of the tubes as the signal increases. The avc voltage fed to the various tubes is split up by a voltage divider network consisting of R163, R165, and R166.

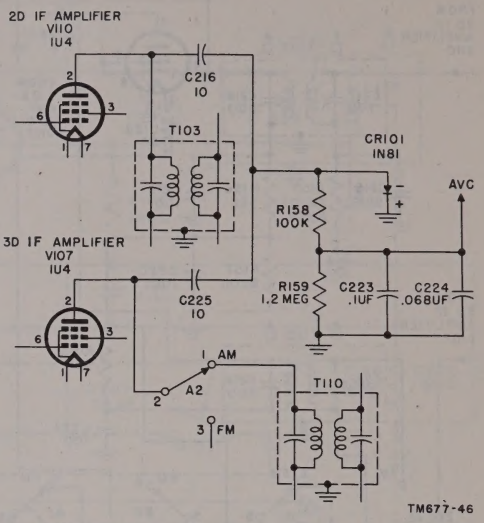

Figure 46. Radio Receiver R–395/PRD–1, functional of diagram of automatic volume control.

Section III. SWITCHING AND CONTROL CIRCUITS OF RADIO RECEIVER R–395/PRD–1

84. Power and Light Switches
(fig. 47)

a. Figure 47 is a simplified power distribution diagram of the receiver. This diagram is very useful in locating troubles in the equipment.

b. POWER switch S104 is a four-pole, single-throw toggle switch. It is used to switch the output of the power supply (battery box or dynamotor-power supply) to the receiver circuits ON or OFF. When S104 is in the ON position, the following actions take place:

(1) A dc filament voltage of 6 volts (positive from the dynamotor-power supply and negative from the battery box) is applied to the filaments of I 101, V101, V102, and V104. If LIGHT switch S105 is closed, this filament voltage is also applied to the filaments of I 102. The path is from pin B of power jack J102, through S104 and through the filaments (all connected in parallel) to ground.

(2) A dc filament voltage of +1.5 volts is applied from pin D of J102 through S104, through the parallel filaments of V103, V114, and V115 to ground. Filament voltage of +1.5 volts is applied to the filaments of V113 when BFO PITCH control switch S103 is closed. Filament voltage of +1.5 volts is applied to contact 1 of S108, to contact 5 on section B2 of S101, and contact 18 on section 2 (front of S102), and through R192 to contact 7 of S109.

(3) A negative 6-volt bias voltage is applied from pin E of J102 through S 104, through R190, to contact 3 of S109. This negative bias voltage is also applied to the grids of V101, V105, V106, V107, V109, and V110, through R171 (SENSITIVITY control) and R197, and to the grid of V115 through the voltage divider network consisting of R188 and R189.

(4) A voltage of +87 volts dc (B+ voltage) is applied from pin C of J102 through S104, through fuse F101, through R191 to contact 8 of S109; through R193, R194 (METER ADJ. control), and R195 to ground; and to the plate and screen cir-

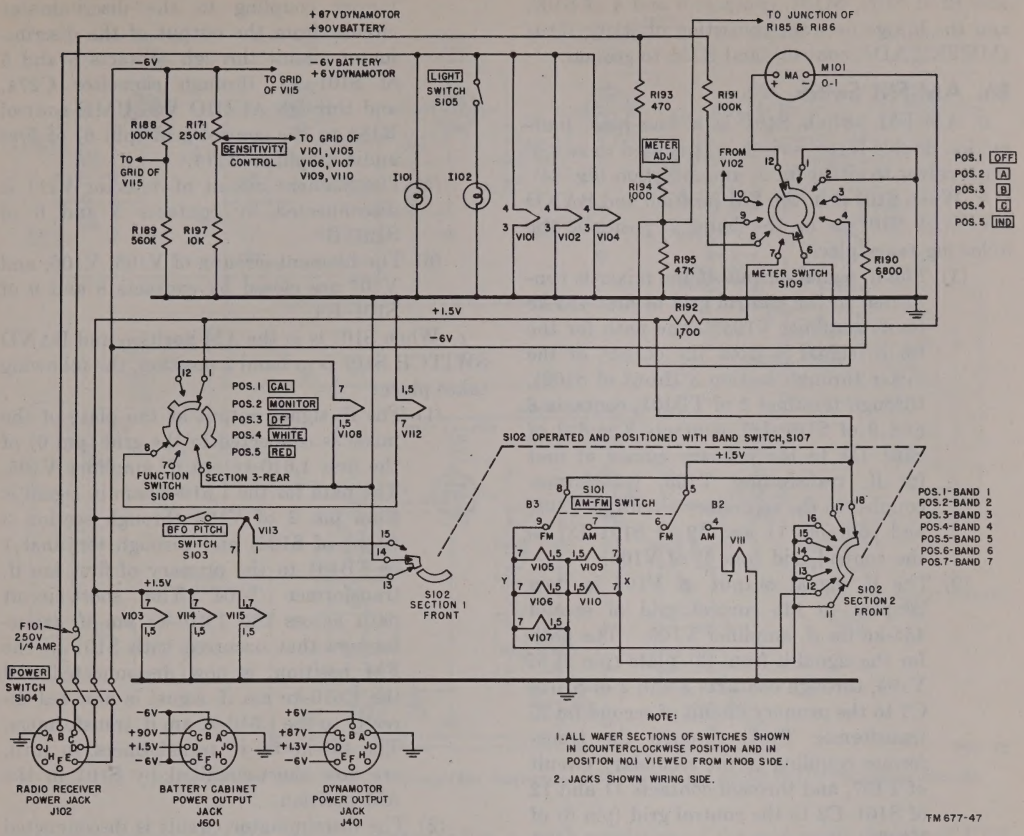

Figure 47. Radio Receiver R-395/PRD-1, diagram of power control circuits.

cuits of all tubes except detector tube V111.

85. Meter Switch

a. Meter switch S109 is a two-pole, five-position rotary switch. It is used to switch milliammeter M101 into the various circuits (*b–f* below) for visual indications by the operator of the equipment.

b. When S109 is in the OFF position (fig. 28), there is no current flow in M101 and the needle of M101 is in the extreme left-hand position.

c. When S109 is in the A position, M101 indicates the value of filament voltage for the vacuum tubes that require a +1.5-volt filament voltage. The 1.5-volt path is from pin D of J102, through S104, R192, contacts 7 and 12 of S109, M101, and contacts 6 and 1 of S109 to ground.

d. When S109 is in the B position, M101 indicates the value of plate voltage (87 volts, B+) in the receiver. The 87-volt path is from pin C of J102 through S104, F101, R191, contacts 8 and 12 of S109, M101, and contacts 6 and 2 of S109 to ground.

e. When S109 is in the C position, M101 indicates the voltage of the battery supplying bias voltage to the grid circuits of V101, V105, V106, V107, V109, V110, and V115. The path for the fixed bias voltage is from pin E of J102, through S104, R190, contacts 3 and 6 of S109, M101, and contacts 12 and 9 of S109 to ground.

f. When S109 is in the IND position, M101 gives a visual indication of the rf signal strength by reading a portion of the screen and plate circuit current of second rf amplifier V102. The path for this current is from pin 6 of V102, through contacts 10

and 12 of S109, M101, contacts 6 and 4 of S109, and the bridge network consisting of R193, R194 (METER ADJ. control), and R195 to ground.

86. AM-FM Switch

a. AM-FM switch S101 is a four-pole, four-section double-throw switch. It is used to switch the receiver to either fm or am operation (fig. 84).

b. When S101 is in the FM position and BAND SWITCH S107 is in the band 7 position, the following takes place:

(1) The if. signal output of the mixer is connected to the control grid of first 455-kc fm if. amplifier V105. The path for the fm if. signal is from the output of the mixer through section 3 (front of S102), through terminal 2 of TB101, contacts 8 and 9 of S101–D2, contacts 3 and 2 of S101–D1 to the primary circuit of first fm if. transformer T105, transformer coupled to the secondary circuit of T105, and contacts 11 and 12 of S101–D3 to the control grid (pin 6) of V105.

(2) The if. signal output of V105 is then coupled to the control grid of second 455-kc fm if. amplifier V106. The path for the signal is from the plate (pin 2) of V105, through contacts 3 and 2 of S101–C1 to the primary circuit of second fm if. transformer T107, through the transformer coupling to the secondary circuit of T107, and through contacts 11 and 12 of S101–C2 to the control grid (pin 6) of V106.

(3) The if. signal output of V106 is then coupled to the control grid of third 455-kc fm if. amplifier V107. The path for the signal is from the plate (pin 2) of V106, through contacts 3 and 2 of S101–B1 to the primary circuit of third fm if. transformer T109, through transformer coupling to the secondary circuit of T109, and through contacts 11 and 12 of S101–B4 to the control grid (pin 6) of V107.

(4) The if. signal output of V107 is connected to the fm discriminator circuit from which the audio portion of the signal is fed to first audio amplifier V114. The path for the signal is from the plate (pin 2) of V107, through contacts 2 and 3 of S101–A2 to the primary circuit of discriminator 455-kc fm transformer circuit T111, through capacitive and transformer coupling to the discriminator circuit, from the output of the discriminator circuit through contacts 6 and 5 of S101–A1, through capacitor C274, and through AUDIO VOLUME control R184 to the control grid (pin 6) of first audio amplifier V114.

(5) The filament circuit of detector V111 is disconnected by contacts 5 and 6 of S101–B2.

(6) The filament circuits of V105, V106, and V107 are closed by contacts 8 and 9 of S101–B3.

c. When S101 is in the AM position and BAND SWITCH S107 is in band 2 position, the following takes place:

(1) The if. signal output at the plate of the mixer is connected to the grid (pin 6) of the first 1,610-kc am if. amplifier V105. The path for the 1,610-kc am if. signal is from pin 2 of V103 through section 3 (front of S102) and through terminal 1 of TB101 to the primary of first am if. transformer T104. The short-circuit path across the 1,610-kc am if. transformers that occurred with S101 in the FM position, is now disconnected and the 1,610-kc am if. signal is now fed directly to the 1,610-kc am if. transformers. The 455-kc fm if. transformers, in turn, are now short-circuited by S101 in the AM position.

(2) The discriminator circuit is disconnected from the output of V107 by contacts 1 and 2 of S101–A2.

(3) The output of the discriminator circuit is disconnected from first audio amplifier V114 and contacts 4 and 5 of S101–A1 now connect the output of detector V111 to the input of first audio amplifier V114.

(4) The filament circuit for detector V111 is closed by contacts 4 and 5 of S101–B2.

d. When S101 is in the AM position and BAND SWITCH S107 is in the band 1, 3, 4, 5, 6, and 7 position, the filament circuits for V109 and V110 are closed, and the filament circuits for V105, V106, and V107 are opened.

87. BFO PITCH Control

(fig. 84)

The BFO PITCH control consists of switch S103 ganged to variable capacitor C200A and C200B. Switch S103 is a one-section, single-pole,

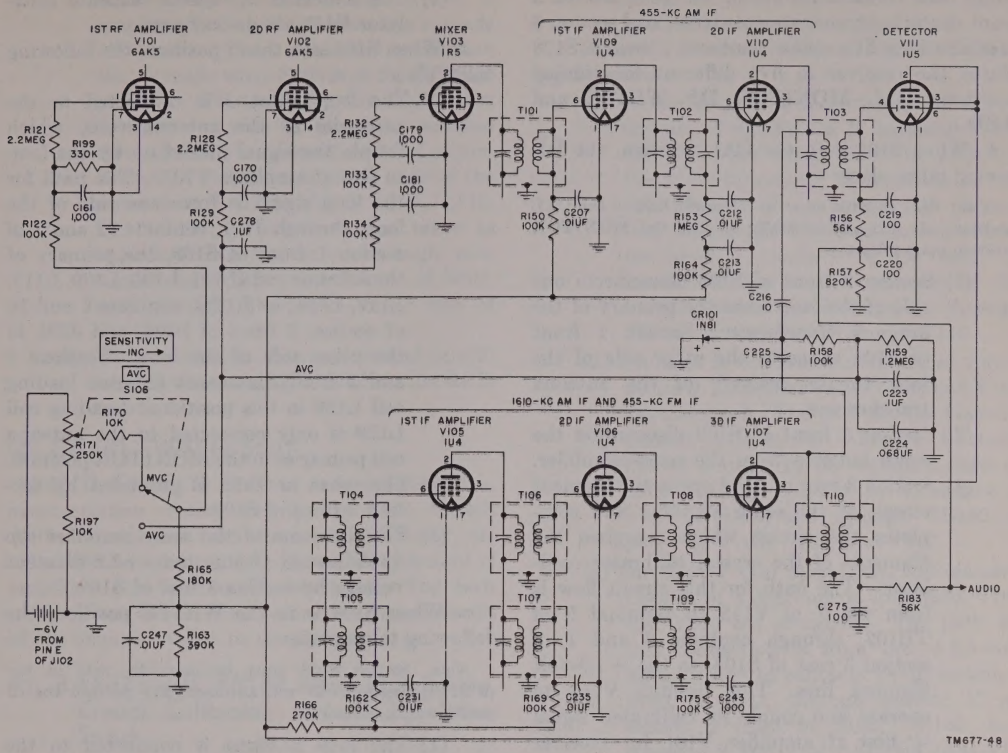

Figure 48. Radio Receiver R-395/PRD-1, simplified diagram of AVC switch and SENSITIVITY control circuits.

wafer-type switch, and the variable capacitor has two sections each of which has a range of 2 to 25 micromicrofarads. When S103 is closed, the filament circuit for bfo tube V113 is energized.

88. AVC Switch and SENSITIVITY Control

a. AVC switch S106 is a single-pole, double-throw switch mounted on the back of SENSITIVITY control R171. It is used to place the receiver in either avc operation or in manual volume control (mvc) operation by adjustment of the SENSITIVITY control.

b. When S106 is in the AVC position (fig. 48), automatic volume control voltage is coupled from the avc circuit to the input circuits of first and second rf amplifier V101 and V102, mixer V103, and if. stages V109, V110, V105, V106, and V107. The path for this negative voltage is from the negative side of R159 to the avc contact and arm of S106 by way of the voltage divider network consisting of R165 and R163, through a parallel path consisting of the grid input circuits of V101, V102, V103, V109, V110, V105, V106, and V107.

c. When S106 is in the manual volume control position, negative voltage is dependent upon the setting of the SENSITIVITY control. This control is coupled from the −6-volt bias line to the input circuit of first rf amplifier V101 and if. amplifiers V109, V110, V105, V106, and V107. The path for this negative voltage is from pin E of J102, through the arm of R171, bias filter resistor R170, and the manual volume control contact and arm of S106, to a parallel path consisting of the grid input circuit of first rf amplifier V101 and the grid input circuits of V109, V110, V105, V106, and V107 by way of R165 and R163. The second rf tube and the mixer tube are always on avc regardless of the position of S106.

89. Function Switch

a. Function switch S108 is a three-section five-position rotary switch (fig. 84). Sections 1 and 2

front, each contain five stator contacts; section 3 front contains three stator contacts; and section 3 rear contains five stator contacts. Switch S108 places the receiver in five different functioning positions: CAL, MONITOR, DF, WHITE, and RED.

b. When S108 is in the CAL position, the following takes place:

Note. Switch S108 must be manually held in the CAL position. It will automatically go into the MONITOR position upon release.

(1) Section 2 front of S108 disconnects one side of the loop from the primary of the antenna transformer. Section 1 front of S108 connects the other side of the loop to the primary of the antenna transformers.

(2) Section 3 front of S108 disconnects the sense antenna from the sense amplifier.

(3) Section 3 rear of S108 opens the filament circuit of the sense amplifier and completes the circuit which energizes the filaments of the crystal calibrator oscillator. The path for this circuit flow is from pin 7 of V112 to terminal 6 of TB102, through contacts 8 and 1 of section 3 rear of S108, to the +1.5-volt filament line. This permits V112 to operate and couple its calibrated signal to first rf amplifier V101 for receiver calibration.

c. When S108 is in the MONITOR position, the following takes place:

(1) Antenna loading coil L129 is connected to the input of the tuned antenna circuit which is connected to first rf amplifier V101. Contact 6 of section 1 front of S108 and contact 5 of section 2 front of S108 make the above connection. This position of sections 1 and 2 also disconnects the loop antenna from the primary of the antenna coils.

(2) The sense antenna is connected to the control grid of the sense amplifier. The path for this connection is from the sense antenna, through J101 and contacts 9 and 5 of section 3 front of S108, to the control grid (pin 6) of V108.

(3) The filaments of the sense amplifier are energized. The path for the circuit flow is from pin 7 of V108 through L130 and contacts 12 and 1 of section 3 rear of S108, to the +1.5-volt filament line.

(4) The filaments of crystal calibrate oscillator V112 are de-energized.

d. When S108 is in the df position, the following takes place:

(1) The loop antenna is connected to the primaries of the antenna coils, which couple the signal picked up by the loop to first rf amplifier V101. The path for the loop signal is from one side of the loop, through J101, contacts 12 and 7 of section 1 front of S108, the primary of the antenna coil (L101, L105, L109, L113, L117, L121, or L125), contacts 6 and 10 of section 2 front of S108, and J101 to the other side of the loop. Sections 1 and 2 front disconnect antenna loading coil L129 in this position. Loading coil L129 is only connected to the antenna coil primaries in the MONITOR position.

(2) The sense antenna is grounded by section 3 front of S108.

(3) The filaments of the sense amplifier are disconnected from the +1.5-filament voltage by section 3 rear of S108.

e. When S108 is in the WHITE position, the following takes place:

Note. Switch S108 must be manually held in the WHITE position. It will automatically go into the df position upon release.

(1) The loop antenna is connected to the primaries of the antenna coils which couple the signal path picked up by the loop to first rf amplifier V101. The path for the loop signal is from one side of the loop through J101, contacts 12 and 7 of section 1 front of S108, the primary of the antenna coil, contacts 6 and 10 of section 2 front of S108, and J101, to the other side of the loop.

(2) The sense antenna is connected to the input of the sense amplifier. This connection is made through contacts 9 and 5 of section 3 front of S108.

(3) The filaments of sense amplifier V108 are energized through contacts 12 and 1 of section 3 rear of S108.

f. When S108 is in the RED position, the following takes place:

Note. Switch S108 must be manually held in the RED position. It will automatically go into the df position upon release.

(1) The loop antenna is connected to the antenna circuit which couples the signal

path picked up by the loop to first rf amplifier V101. This connection is made 180° out of phase with the connection that is made when S108 is in the WHITE position. The path for this connection is from one side of the loop antenna through J101, contacts 12 and 6 of section 2 front of S108, the opposite path of the antenna coil (L101, L105, L109, L113, L117, L121, or L125), to that taken as explained in *e*(1) above, through contacts 7 and 9 of section 1 front of S108, and through J101 to the other side of the loop.

(2) The connections that are covered in *e*(2) and (3) above are again made in the RED position.

90. BAND SWITCH S107

BAND SWITCH S107 is a fourteen-section, seven-position, rotary switch (fig. 84). Switch S107 controls the connections of the tuned circuits for the antenna, first rf amplifier, second rf amplifier, and local oscillator stages. For each of the seven bands, S107 connects a tuned circuit of the required value to the above stages.

91. BAND SWITCH S102, Filament Switching, Crystal Calibrator, and BFO Selector Switch

a. BAND SWITCH S102 is the if. filament, crystal calibrator, and beat-frequency oscillator selector switch. It is a four-section, seven-position rotary switch (fig. 84). It is coupled by means of levers to the shaft operating BAND SWITCH S107 and is operated and controlled by the BAND SWITCH control knob.

b. Section 1 front of S102 performs the following functions:

(1) On bands 1, 3, 4, 5, 6, and 7, the filament circuit of the 455-kc section of the bfo is energized. The path for this connection is from the +1.5-volt filament line, through S103, pins 4 and 7 of V113, and contacts 13 and 14 of section 1 front of S102 to ground.

(2) On band 2, the filament circuit of the 1,610-kc section of the bfo is energized. The path for this connection is from the +1.5-volt line, through S103, pins 4 and 1 of V113, and contacts 15 and 14 of section 1 front of S102, to ground. On band 2, the 455-kc filaments are de-energized; on all other bands, the 1,610-kc filaments are de-energized.

c. Section 2 front of S102 performs the following functions:

(1) On bands 1, 3, 4, 5, and 6, the filament circuits of 455-kc am if. amplifier V109 and V110 are energized. The path for the filament current is from the +1.5-volt filament line to contact 18 on section 2 front of S102, through contact 11 for band 1 (contact 13 for band 3; contact 14 for band 4; contact 15 for band 5; contact 16 for band 6), through TB102 to pins 7 of V109 and V110.

(2) On band 2, the filament circuits of 1,610-kc am if. amplifiers V105, V106, and V107 are energized. The path for the filament current is from the +1.5-volt filament line to contact 18 on section 2 front of S102, through contact 12 of section 2 front of S102, and through TB102 to pins 7 of V105, V106, and V107.

(3) On band 7 (am operation), the filament circuits of 455-kc am if. amplifiers V109 and V110 are energized. The path for this connection is from the +1.5-volt filament line to contacts 18 on section 2 front of S102, through contact 17 on section 2 front of S102, TB102, and contacts 8 and 7 of S101–B3 (AM-FM switch), to pins 7 of V109 and V110.

(4) On band 7 (fm operation), the filament circuit of 455-kc fm if amplifiers V105, V106, and V107 are energized. The path for this connection is from the +1.5-volt filament line to contact 18 on section 2 front of S102, through contact 17 on section 2 front of S102, TB102, and contacts 8 and 9 of S101–B3 (AM-FM switch), to pins 7 of V105, V106, and V107.

d. Section 3 front of S102 performs the following functions:

(1) On bands 1, 3, 4, 5, and 6, the 455-kc am if signal output of mixer V103 is coupled to input transformer T101 of first 455-kc am if amplifier V109. The path for the signal is from the plate of the mixer to contact 18 on section 3 front of S102, through contact 11 for band 1 (contact 13 for band 3; contact 14 for band 4; contact 15 for band 5; contact 16 for

band 6), and through terminal 3 of TB101 to T101.

(2) On band 2, the 1,610-kc am if signal output of mixer V103 is coupled to 1,610-kc input transformer T104 of first 1,610-kc am if. amplifier V105. The path for the signal is from the plate of the mixer to contact 18 on section 3 front of S102, through contact 12 on section 3 front of S102, and through terminal 1 of TB101 to T104.

(3) On band 7, the output from mixer V103 is fed to contact 18 on section 3 front of S102, through contact 17 on section 3 front of S102, and through terminal 2 on TB101 to contact 8 on S101–D2 (AM-FM switch). For am operation, the signal goes through contacts 8 and 7 of S101–D2 to T101 (the am if. transformer for V109). For fm operation, the signal goes through contacts 8 and 9 of S101–D2 and through contacts 3 and 2 of S101–D1 to T105 (the fm if. transformer for V105).

e. Section 4 rear of S102 performs the following functions:

(1) On bands 1, 2, and 3, 100-kc crystal Y103 is connected between the plate and control grid of crystal calibrator oscillator V112. The path for this connection is from Y103 to contact 9 on section 4 rear of S102 for band 1 (contact 10 for band 2; contact 11 for band 3) through contact 16 on section 4 rear of S102 to the control grid (pin 6) of V112.

(2) On bands 4 and 5, 1.3-mc crystal Y102 is connected between the plate and control grid of crystal calibrator oscillator V112. The path for this connection is from Y102 to contact 12 on section 4 rear of S102 (contact 13 for band 5) through contact 16 on section 4 rear of S102 to the control grid (pin 6) of V112.

(3) On bands 6 and 7, 4-mc crystal Y101 is connected between the plate and control grid of crystal calibrator oscillator V112. The path for this connection is from Y101 to contact 14 on section 4 rear of S102 for band 6 (contact 15 for band 7) through contact 16 on section 4 rear of S102 to the control grid (pin 6) of V112.

f. Section 4 front of S102 performs the following functions:

(1) The 100-kc tank circuit (L141 and C281) is connected through contact 18, 1, or 2 for operation of band 1, 2, or 3.

(2) The 100-kc tank circuit is short-circuited through contact 3, 4, 5, or 6 for operation on band 4, 5, 6, or 7.

g. Section 2 rear of S102 performs the following function: It couples resistors R198, R200, and R201, which form a grid bias voltage dividing network, to limit the gain of sense amplifier V108, on bands 1 and 2 only.

Section IV. THEORY OF POWER SUPPLY UNITS

92. Dynamotor-Power Supply DY–79/PRD–1

a. Dynamotor-Power Supply DY–79/PRD–1 is one of two power sources provided for the operation of Radio Receiver R–395/PRD–1. The unit is powered from a 24-volt vehicular storage battery (not furnished). Connection from the storage battery to power input jack J1 on the front panel of Dynamotor-Power Supply DY–79/PRD–1 is made by either power cord shown in figure 23. The 50-ft cord, W1, is used for field operation; the 8-ft cord, W2, for jeep operation.

b. Dynamotor-Power Supply DY–79/PRD–1 (fig. 49) contains four stages as follows:

(1) Dynamotor D1, two current tubes V1 and V2, and control tube V3, together with bias battery BT1 (not furnished), furnish B+ voltage of +87 volts at 25 to 45 milliamperes.

(2) Bias battery BT1 to furnish a bias voltage of −6 volts ±10 percent.

(3) Voltage regulator RT1 to furnish a heater voltage of +6 volts ±10 percent at .65 to .8 ampere.

(4) Voltage regulator RT2 to furnish a filament voltage of +1.3 volts ±10 percent at .45 ampere.

c. The schematic circuit diagram of Dynamotor-Power Supply DY–79/PRD–1 (fig. 83) shows the input to dynamotor D1 passing through noise suppressors L3 and FL1, with C2 and C6 acting as shunt noise suppressors for D1. Capacitor C1 is used as a noise suppressor on the storage battery cable output. The output of D1 is fed to two current tubes V1 and V2 through a noise suppressor network consisting of coil L1, capacitors C8 and C9, and parasitic suppressor resistors R1,

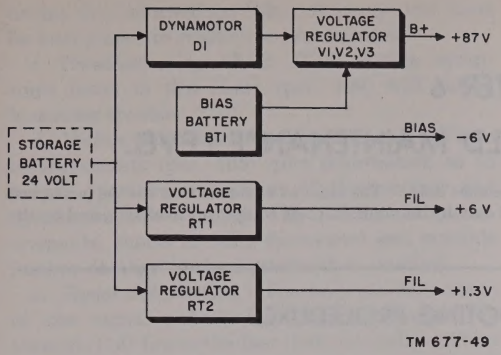

Figure 49. Dynamotor-Power Supply DY–79/PRD–1, block diagram.

R2, R3, and R4. Capacitor C7 is a bypass capacitor for the output of D1, and resistors R5 and R6 constitute a voltage divider for the output of D1. The decoupling resistors are R23 and R24. The output of V1 and V2 is controlled by V3 and regulation adjustment R10. Resistor R7 is the grid resistor of V1 and V2. B+ adjustment is made by R8. Capacitors C13, C15, C16, and C17 are noise suppressors. Resistor R25 is an automatic control bias for V3. The 87-volt output of the dynamotor is available at pin C of output jack J3.

d. The +6-volt heater circuit consists of ballast tube RT1 in series with an adjustable resistance voltage divider network consisting of R11, R12, R13, R14, R15, and R16. The output is available at pin B of output jack J3.

e. The 1.3-volt filament circuit consists of ballast tube RT2 in series with an adjustable resistance voltage divider network consisting of R17, R18, R19, R20, R21, and R22. Capacitor C3 is a bypass for RT2. The output is available at pin D of output jack J3.

f. The −6-volt bias voltage is supplied by bias battery BT1 which also acts as the reference voltage source for the voltage regulator and is available at pin E of output jack J3.

g. In the following theory of operation of the voltage regulator, all characteristics are versus a source voltage variation of 20 to 32 volts. Also, the four triode sections of the two 12AU7 tubes, V1 and V2, will be referred to collectively as the current tube. The output of dynamotor D1 versus battery voltage is a rising voltage from approximately 215 volts to 400 volts as the battery voltage varies from 20 to 32 volts; the regulated output voltage is to be maintained at 87 volts ±3 volts. The difference between these voltages is taken up by the plate drop in current tube V1 or V2. Control tube V3 acts as a linear transfer device where the output (plate current) is a linear function of its input (net grid-cathode voltage applied to the control tube). This current flowing through R7 produces the current tube grid bias.

h. The control voltage is the resultant of four voltage components: a fraction of the dynamotor output voltage; control tube degeneration voltage; bias battery voltage; and voltage across R25 (due essentially to the B+ load current). These four voltages combine to give a slightly overcompensated voltage regulation. As the voltage of the vehicular storage battery drops, the B+ voltage rises, thus tending to compensate for the loss in receiver sensitivity due to falling heater voltages. The changing B+ voltage due to the load current variation of 25 to 45 milliamperes is held to ±3 volts. Three of the four components of the control voltage are determined by fixed circuit parameters; the fourth control tube cathode voltage is adjustable by regulation control R10. Screen control R8, on V3, is used for B+ adjustment. All controls are factory adjusted for proper operation.

93. Battery Box CY–947/PRD–1

a. Battery Box CY–947/PRD–1 furnishes an alternative source of power for Radio Receiver R–395/PRD–1 and may be used in place of Dynamotor-Power Supply DY–79/PRD–1. The battery box contains two-type BA–419/U and five-type BA–404/U dry batteries (not furnished).

b. The wiring diagram of the battery box (fig. 82) shows the batteries connected to power output jack J601 in the following manner:

(1) One-type BA–404/U battery is connected to pins D and A supplying +1.5 volts for filaments using 1.5 volts.

(2) Four-type BA–404/U batteries in series are connected to pins B and A supplying −6 volts for heaters requiring 6 volts. The batteries are also connected to pins E and A supplying a −6-volt bias.

(3) Two-type BA–419/U in parallel are connected to pins C and A supplying +90 volts (B+) for plate supply.

c. When in use, power output jack J601 on the top of the battery box is connected to power supply jack J303 on the bottom of the receiver cabinet.

CHAPTER 6

TROUBLESHOOTING AT FIELD MAINTENANCE LEVEL

Note. This chapter contains information for field maintenance only. The amount of repair that can be performed by personnel having field maintenance responsibility is limited only by the tools and test equipment available, and by the skill of the repairman.

Section I. TROUBLESHOOTING PROCEDURES

Warning: Be very careful when working on the inside, probing under the chassis, or when making voltage measurements on the equipment. Dc voltages up to 90 volts are present which will burn out the battery type tubes even if only momentarily shorted across the filament line.

94. Component Sectionalization and Localization

a. The first step in servicing a defective direction finder set is to sectionalize the fault. This means tracing the fault to the major unit (component) responsible for the abnormal operation of the equipment. The second step is to localize the fault. This means tracing the fault in a major unit to the defective part responsible for the abnormal condition. Some faults such as burned-out resistors and shorted transformers often can be located by sight, smell, or hearing. The majority of faults, however, must be localized by checking voltages and resistances. In taking the two steps, follow the procedure in *b* and *c* below.

b. Determine whether the trouble is in the antenna, in the receiver, or in the power source (dynamotor-power supply or battery box). Operate the equipment and observe its performance. The overall operation of the equipment can be checked through the front panel controls on the receiver. If excessive noise or howling is present in the audible output, remove the antenna. If removal of the antenna does not cause the noise or howling to become less pronounced, or to disappear entirely, the trouble is in the receiver or the power source. If the receiver is inoperative, the trouble is probably in the power source or connections to the power source. The power input to the receiver can be checked by meter M101 on the receiver front panel. Check fuses at an early stage in troubleshooting. Do not continue to burn out fuses before looking elsewhere to determine the basic source of the trouble.

c. Once the fault has been localized to a major unit, the tests listed in paragraph 95 will make it possible to isolate the part at fault. To be effective, the procedure should be followed in the order given. Remember that servicing procedure should cause no further damage to the equipment.

95. Troubleshooting Procedures

a. Visual Inspection. Through visual inspection alone the repairman may frequently discover the trouble or determine the stage in which the trouble exists. This inspection is valuable in avoiding additional damage to the equipment which might occur through improper servicing methods and in forestalling future failures. When failure is encountered and the cause is not immediately apparent, check as many of the items listed below as is practicable before starting a detailed examination of the component parts of the system. If possible, obtain information from the operator regarding the performance of the equipment at the time trouble occurred. Failure of the equipment to operate properly will usually be caused by one or more of the following faults:

(1) Improperly connected battery cable.
(2) Worn, broken, or disconnected cords or plugs.
(3) Burned-out fuses.
(4) Wires broken because of excessive vibration.
(5) Defective tubes.
(6) Inactive (dirty or cracked) crystals.

b. Operational Tests. The operational tests (pars. 102 and 103) are important because they frequently indicate the general location of trouble. In many instances, the information gained will determine the exact nature of the fault. To

utilize this information fully, all symptoms must be interpreted in relation to one another.

c. Troubleshooting Chart. The trouble symptoms listed in this chart (par. 104) will aid in localizing trouble.

d. Voltage and Resistance Measurements. These measurements (par. 105) give information as to proper operating conditions of the receiver and dynamotor-power supply. By making such measurements, shorts are also discovered and possible further damage to the equipment is avoided.

e. Signal Substitution. The principal advantage of the signal substitution method (pars. 107 through 113) lies in the fact that it usually enables the repairman to localize a trouble accurately and quickly to a given stage when the general location of the trouble is not immediately evident from the above tests.

f. Stage Gain Charts. These charts (par. 114) can be used to localize obscure hard-to-find trouble.

g. Intermittents. In the above tests, the possibility of intermittents should not be overlooked. If present, this type of trouble may often be made to appear by tapping or jarring the equipment. It is possible that the trouble is not in the equipment itself but in the installation, or the trouble may be due to external conditions.

96. Troubleshooting Precautions

a. Whenever any unit of Direction Finder Set AN/PRD–1 is serviced, observe the following precautions:

(1) Observe all safety precautions especially when handling units where high voltages and high currents are used, such as those found in the dynamotor-power supply. Be sure capacitors are discharged before handling them. See that the unit being serviced is disconnected both from the power supply line and from all other units of the equipment. *Carelessness can result in death or serious injury.*

(2) Before removing a part, tag or mark it and all its connections so that when it is replaced, the proper connections will be made. This is especially important whenever transformers are removed.

(3) When unsoldering, be careful not to allow drops of solder to fall into the unit since they may cause short circuits. This same precaution should be observed when soldering.

(4) When soldering, be sure a well-soldered joint is made, because a carelessly-soldered joint can create a new fault. Such a fault is one of the most difficult to find.

(5) Careless removal and replacement of parts may make new faults inevitable. *Carefully* push or pull other leads out of the way when necessary.

(6) Be sure all screw-type connections make good electrical contact; also be sure all mechanical connections are tight.

b. Whenever a new part is replaced in an rf or if. circuit, be sure the new part is *electrically and mechanically identical with the part it replaces and is placed in exactly the same position as the original part.* This is very important since a replaced part which has the same electrical value but differs in physical size and shape may cause trouble in high-frequency circuits.

c. Give particular attention to proper grounding when a part is replaced. Always use the same ground as in the original wiring. Failure to observe this precaution may result in low gain or possible oscillation of the circuit.

97. Troubleshooting Data

Take advantage of the material supplied in this manual; it will help in the rapid location of faults. Consult the following troubleshooting data:

Fig. or par. No.	Description
	Antenna AS–536/PRD–1 and Antenna AT–301/PRD–1:
Par. 6	Bearing accuracy.
	Radio Receiver R–395/PRD–1:
Par. 7	Technical characteristics.
Par. 68, 69	Theory.
Par. 70 through 83.	Stage-by-stage analysis.
Par. 84 through 91.	Switching and control circuits.
Par. 94 through 96.	Troubleshooting procedures.
Par. 101	Checking power supply circuits for shorts.
Par. 102	Operational tests.
Par. 104	Troubleshooting charts.
Par. 105	Tube socket voltage and resistance diagram.
Par. 106	Additional troubleshooting information.
Par. 107 through 114.	Troubleshooting tests.

Fig. or par. No.	Description
Fig. 50 through 62.	Radio Receiver R–395/PRD–1 (interior views of parts and components).
Fig. 29	Special tools required for maintenance of direction finder set.
Fig. 84	Radio Receiver R–395/PRD–1, schematic diagram.
	Dynamotor-Power Supply DY–79/PRD–1:
Par. 7	Technical characteristics.
Par. 92	Theory.
Par. 99	Checking power supply circuit for shorts.
Par. 103	Operational tests.
Par. 106	Tube socket voltage and resistance diagram.
Fig. 63 and 64	Dynamotor-Power Supply DY–79/PRD–1 (interior views).
Fig. 83	Dynamotor-Power Supply DY–79/PRD–1, schematic diagram.
	Battery Box CY–947/PRD–1:
Par. 7	Technical characteristics.
Par. 93	Theory.
Par. 100	Checking circuits for shorts.
Par. 103	Operational test.
Fig. 19	Battery Box CY–947/PRD–1 (interior view).
Fig. 82	Battery Box CY–947/PRD–1, wiring diagram.

98. Test Equipment Required for Troubleshooting

The test equipment required for troubleshooting Direction Finder Set AN/PRD–1 is listed below. The manuals associated with the test equipment are also listed.

Test equipment	Manual
Signal Generator AN/URM–25A	TM 11–5551A.
Multimeter TS–352/U or TS–297/U	TM 11–5527 or TM 11–5500.
Electronic Multimeter TS–505/U	TM 11–5511.
Oscilloscope OS–8A/U	TM 11–1214.
Audio Oscillator TS–382/U	TM 11–2684A.
Electron Tube Test Set TV–7/U	TM 11–5083.
Analyzer ZM–3/U	TM 11–5043.
Frequency Meter AN/URM–79	TM 11–5094.
Frequency Meter AN/URM–80	Applicable literature.

Section II. CHECKING POWER SUPPLY CIRCUITS FOR SHORTS

99. Dynamotor-Power Supply DY–79/PRD–1

a. Preliminary Steps. Dynamotor-Power Supply DY–79/PRD–1 contains four circuits that furnish outputs of +87 volts (B+), +6 volts, +1.3 volts, and −6 volts. The points where shorts are likely to occur in any circuit and the general procedure to locate them are given below. Before making any checks, disconnect the power source from POWER INPUT jack J1 of the dynamotor-power supply and throw POWER switch S1 to OFF.

b. Circuits. All circuits are protected by fuse F1. If the fuse blows, remove the following: RT1, RT2, V1, V2, V3, and I1. Refer to figure 83 and check the following:

(1) For shorts in the +6-volt circuit, check continuity to ground from test point A and pin B of J3.

(2) For defective C3, check continuity to ground from test point C.

(3) For defective FL1, C2, or C6, check continuity from fuse F1 to ground.

(4) For defective C7, C8, C9, C15, or C16, remove one of the high-voltage (hv) brushes on the secondary side of the dynamotor and check continuity to ground from any point in the circuit, the limits of which are the secondary side of D1, plates of V1 and V2, pin 1 of V3, and pin E of J3.

c. +87-Volt Circuit. Refer to figure 83 and check the following:

(1) Measure the resistance between pins C and A of J3. A reading of 90,000 ohms should be obtained. A reading appreciably lower indicates a short which must be corrected before power is applied.

(2) For defective FL1 or L3, check continuity from fuse F1 through L3, FL1, and D1 (primary) to ground.

(3) For defective C13 or C17, check continuity from pin C of J3 to ground.

d. +6-Volt Circuit. Refer to figure 83 and check the following:

(1) The resistance measurement between pins B and A (ground) of J3 should read 4.2 ohms. A reading appreciably lower indicates a short which must be corrected before power is applied.

(2) For a short in R11 through R16, check continuity from test point A to ground. A reading of approximately 6.8 ohms should be obtained.

e. +1.3-Volt Circuit. Refer to figure 83 and check the following:

(1) The resistance measurement between pins D and A of J3 should read .7 ohm. A reading appreciably lower indicates a short which must be corrected before power is applied.

(2) For a short in R17 through R22, check continuity from test point C to ground. A reading of approximately 4.5 ohms should be obtained.

(3) For defective C3, check from test point C to ground.

f. −6-Volt Circuit. Refer to figure 83 and make the following check. With POWER INPUT jack J1 disconnected from the storage battery source, set POWER switch S1 to ON. Measure the voltage between pins A and E of J3. A reading of not less than −5.5 volts must be obtained. If the reading is appreciably lower, set the POWER switch to OFF and install a new battery.

100. Battery Box CY–947/PRD–1

a. Preliminary Steps. Before making the checks listed below, disconnect the battery box from the receiver. The unit has no controls or switches. If the voltage measurements are found to be appreciably lower than those listed, it indicates that battery voltages are below standard or there are short circuits. In such cases, refer to figure 82 and check each battery and circuit.

b. +90-Volt Circuit. Measure the voltage between pins C and A of J601. A reading of 90 volts should be obtained from the new batteries.

c. −6-Volt Circuit. Measure the voltage between pins B and A of J601 from the new batteries. A reading of −6 volts should be obtained.

d. +1.5-Volt Circuit. Measure the voltage between pins D and A of J601. A reading of 1.5 volts should be obtained from a new battery.

101. Radio Receiver R–395/PRD–1

a. Preliminary Steps. Shorts within the radio receiver often may be located by first checking the resistance of the power supply circuits before applying power to the equipment, thereby preventing damage to the power supply. Before making the checks listed below, disconnect the power supply (dynamotor-power supply or battery box) from power supply jack J303 of the cabinet that houses the receiver. Remove the receiver from its cabinet to gain access to radio receiver power jack J102. Set the controls on the receiver as follows:

(1) POWER switch S104 to ON.
(2) LIGHT switch S105 to OFF.
(3) SENSITIVITY control R171 to almost maximum clockwise position (not the AVC position).
(4) BAND SWITCH S107 to BAND 1.
(5) Function switch S108 to DF.
(6) Meter switch S109 to OFF.
(7) AM–FM switch S101 to AM.
(8) BFO PITCH control switch S103 to OFF.

b. +6-Volt Filament Circuits. Measure the resistance between pins B and A of J102. The resistance reading should be 1.3 ohms. A resistance reading appreciably lower indicates a short circuit in the 6-volt filament circuit. Check tube sockets of V101, V102, and V104 and associated filament wiring.

c. +1.5-Volt Filament Circuit. Measure the resistance between pins D and A of J102, with function switch S108 in the MONITOR position and BFO PITCH control switch S103 in the ON position. The reading should be approximately 1 ohm. An appreciably lower reading indicates a short circuit in the 1.5-volt filament circuit of the receiver. With the function switch in the DF position, BFO PITCH control switch to OFF, the receiver on BAND 1, and with V103, V109, V110, V111, V114, and V115 removed from their sockets, the resistance reading from pin D to A of J102 will be approximately 1,700 ohms (switch S109 in the A position). A higher reading will indicate a faulty meter or resistance in the A position circuit.

(1) If the short is on the 1.5-volt filament circuit, turn BAND SWITCH S107 from BAND 1 to BAND 2. If the short circuit is cleared, then it is due to a fault in or around V109 and V110 tube sockets.

(2) If the short circuit still persists when switch S107 is on BAND 2, then a fault exists in or around V111, V114, and V115 tube sockets.

(3) After correcting the fault, the receiver may still have defects on BAND 2 or on BAND 7, with the AM-FM switch in the FM position (because tubes V105, V106, and V107 are used only on these bands).

(4) A short caused by sense amplifier tube V108 can be quickly located by turning function switch S108 from the MONITOR position to the DF position; this operation disconnects the filament voltage from V108.

(5) A short caused by bfo tube V113 filament circuit can be determined by turning BFO PITCH control switch S103 to OFF; this disconnects the bfo tube filament.

(6) A short caused by crystal calibrator oscillator tube V112 will appear only when function switch S108 is in the CAL position; this position connects the filament voltage to V112.

d. B+ Circuit. With meter switch S109 in the OFF position, the resistance between pins C and A of J102 should be approximately 50,000 ohms. With S109 in the B+ position, the resistance reading between these same pins should be approximately 35,000 ohms. A reading appreciably lower indicates a short circuit in the B+ circuit of the receiver which must be corrected before power is applied.

e. —6-Volt Bias Circuit. Measure the resistance between pins E and A of J102. With meter switch S109 OFF and SENSITIVITY control R171 fully *clockwise*, the resistance should read approximately 120,000 ohms; with the SENSITIVITY control fully *counterclockwise* the resistance between these pins should read approximately 80,000 ohms. With S109 in the C position, the resistance between pins E and A of J102 should be approximately 6,500 ohms regardless of the position of the SENSITIVITY control. Readings appreciably lower than these indicate a short circuit in the bias circuit (—6 volts) of the receiver which must be corrected before power is applied.

f. Radio Receiver Power Jack J302, and Power Supply Jack J303. These two jacks are located in the cabinet housing of the receiver and are connected in series (fig. 20). Jack J302 makes connection with radio receiver power jack J102 (fig. 22). Check the continuity of J302 and J303 and J102.

Section III. OPERATIONAL TESTS

102. Radio Receiver R–395/PRD–1

a. Operate the equipment as directed in the manual for Direction Finder Set AN/PRD–1. The equipment performance checklist (par. 66*f*) will frequently indicate the general location of trouble.

b. When troubleshooting the receiver, the repairman should keep in mind the various sections (stages) of the unit. These are listed in paragraph 68 and shown in figure 32 (block diagram) and figure 84 (schematic diagram). In addition, it will also be of considerable help to remember the following:

(1) The metering circuit, using meter M101 and meter switch S109, measures the power supply voltages on positions A, B, and C of S109 and indicates signal strength on the IND position. The signal can originate from a station on the air or from the crystal calibrator oscillator in the receiver.

(2) Aural output in the headset can be obtained from a signal on the air or from a signal generated in the receiver when function switch S108 is in the CAL position and BFO PITCH control switch S103 is turned ON and set to 0. Aural output will be obtained on any band at the calibrating points marked in red on the dial. A simultaneous visual meter indication will also be obtained at these points.

(3) The crystal calibrator oscillator uses three crystals: 100–kc crystal Y103 is used on bands 1, 2, and 3; 1.3–mc crystal Y102 is used on bands 4 and 5; and 4–mc crystal Y101 is used on bands 6 and 7.

c. By using the combination of the function switch, the meter, the beat-frequency oscillator, the crystal calibrator oscillator, and the headset, it is possible to isolate faulty sections of the receiver. The faulty section can, in many instances be cured by a tube or crystal replacement. The quickest and simplest way is to set function switch S108 to the DF position and tune in a station on the air. The station modulation and noise will be heard in the headset. If there are no stations on the air, only noise will be heard in the

headset, but this does not necessarily mean that the receiver is functioning properly as it is possible for either first rf amplifier tube V101 or second rf amplifier tube V102 to be bad and still get a rushing noise in the headset. The receiver functions properly, as far as tube operation is concerned, when an air signal is received on band 1, 3, 4, 5, 6, or 7, and on band 2. Receiving an air signal on band 1, 3, 4, 5, 6, or 7 checks the rf sections, the mixer and oscillator sections, the 455-kc am if. section, and the audio section for these bands. Receiving a signal on band 2 also checks the rf section, the mixer and oscillator section, the audio section and, in addition, checks the 1,610-kc am if. section for this band. By changing the function switch from the DF position to the MONITOR position, the air signal received in the DF position should also be heard in the MONITOR position. If it is not heard in the MONITOR position, then sense amplifier tube V108 is faulty and should be replaced.

d. If there is no air signal on any band, the receiver performance should be checked by turning the function switch to CAL, turning on the BFO PITCH control switch and setting its dial pointer to 0, and tuning the receiver to a calibrating point on, for example, band 1. If an aural indication is obtained in the headset and a visual indication is shown on the meter (meter switch in IND position) as the receiver is tuned about the calibrating point, then the receiver performs on band 1. But if only a meter indication is obtained and nothing is heard in the headset as the volume control is turned *clockwise*, then either detector V111 or audio amplifier section V114 or V115 is at fault. The trouble probably can be found by changing tube V111, V113, V114, or V115.

e. If on band 1, neither a visual nor aural indication is obtained, then go to band 4 or band 6, and if both bands give no responses, then the fault is in the receiver chain. If there are no responses on band 1 or band 3 but there are responses on band 4, then 100-kc crystal Y103 is bad.

103. Power Supply Units

a. Dynamotor-Power Supply DY–79/PRD–1. Operate the equipment as directed in this manual. Refer to the equipment performance checklist (par. 66*f*) for the dynamotor-power supply. A study of this checklist will frequently indicate the location of trouble. When the dynamotor-power supply is operating properly, its output should meet the performance data given in paragraph 92.

b. Battery Box CY–947/PRD–1. When the equipment is operated by the battery box, refer to the equipment performance checklist. When the battery box is operating properly, the output should meet the performance data given in paragraphs 93 and 100.

Section IV. TROUBLESHOOTING CHARTS

104. Troubleshooting Charts

a. Radio Receiver R–395/PRD–1. The troubleshooting chart that follows is supplied as an aid in localizing trouble in the receiver, the dynamotor-power supply, and the battery box. The chart lists the symptoms, the probable trouble, and the corrections of the fault that may be the cause of the trouble. They also indicate how to localize trouble quickly in the rf, if., audio, and power stages. Once the trouble has been localized to a stage or circuit, a tube check and voltage and resistance measurements of this stage or circuit should ordinarily be sufficient to isolate the defective part. For normal voltage and resistance measurements, refer to paragraph 105.

Symptom	Probable trouble	Correction
1. Power supply connected. POWER switch (S104) thrown to ON position, but receiver fails to operate. Tubes do not light and meter (M101) does not read on positions A, B, and C.	Defective battery box or dynamotor-power supply (whichever is being used).	Check and repair battery box or dynamotor-power supply (par. 104).
	Defective POWER switch (S104).	Repair or replace (fig. 55).
	Defective ground connection at terminal A of J102.	Repair ground connection (figs. 22 and 83).
	Defective connection between J102 and J303.	Repair connection (fig. 22).

Symptom	Probable trouble	Correction
2. Tuning dial light (I 101) and panel light (I 102) indicate, but meter (M101) fails to indicate with S109 in B position, and receiver does not operate.	Defective battery box or dynamotor-power supply (whichever is being used).	Refer to 1 above.
	Blown fuse F101	Check B+ supply for shorts. Correct and replace with new fuse (fig. 55).
	Defective B+ section of S104	Repair B+ section (fig. 55).
	Defective or loose J102, J303; or fuse holder XF101.	Check continuity of pin C from J102 to J303 (figs. 20, 22, and 84). Check continuity of pin C from J102 to terminal 3 of TB102 (figs. 61 and 84). Correct faults. This will check most of the input circuit of the B+ line.
3. Meter (M101) indicates correctly in all positions of S109, except A position, and receiver fails to operate.	Defective battery box or dynamotor-power supply (whichever is being used).	Check battery box for 1.5 volts at pin D of J601. (Refer to figs. 19 and 82.) If abnormal, refer to Battery Box CY–947/PRD–1 section of troubleshooting chart.
		Check dynamotor-power supply for 1.3 volts at pin D of J401 (figs. 18 and 83). If abnormal, refer to Dynamotor-Power Supply DY–79/PRD–1 section of troubleshooting chart.
	Defective 1.5-volt section of POWER switch (S104).	Check and repair (fig. 55).
	Defective or loose J102, J303	Check continuity pin D of J102 to J303 (figs. 20 and 22); check continuity of pin D from J102 to terminal 5 of TB102 (fig. 61). Correct faults. This will check most of the input circuit of the 1.5-volt line.
4. Meter (M101) indicates correctly in all positions of S109, except C position, and receiver fails to operate.	Defective battery box or dynamotor-power supply (whichever is being used).	Check battery box for −6 volts at pin E of J601 (figs. 19 and 82). If abnormal, refer to Battery Box CY–947/PRD–1 section of troubleshooting chart.
		Check dynamotor-power supply for −6 volts at pin E of J3 (figs. 64, 83). If abnormal, refer to Dynamotor-Power Supply DY–79/PRD–1 section of troubleshooting chart.
	Defective −6-volt section of POWER switch (S104).	Check and repair (fig. 55).
	Defective or loose J102, J103	Check continuity pin E of J102 to J103 (figs. 20, 22, 55, 84). Check continuity pin E of J102 to high side of R171. Correct faults. This will check most of the −6-volt input circuit.
5. Meter (M101) indicates correctly in all positions of S109, except IND position, and receiver output is normal.	Defective 2d rf amplifier circuit (V102).	Check and replace faulty V102 and parts associated with circuit (figs. 56, 57, and 84).
	Defective avc circuit	Check if avc voltage increases with increase of signal. If not, refer to symptoms 18 and 19.
	Defective meter bridge circuit	Check and readjust, repair, or replace METER ADJ control R194, meter switch S109, resistors R193 and R195, and associated connections (figs. 55, 60, and 84).

Symptom	Probable trouble	Correction
6. Meter (M101) indicates correctly in all positions of S109 except IND position, and there is little or no receiver output on all bands.	Defective 1st and 2d, rf amplifier circuits V101 and V102, mixer circuits V103, and local oscillator circuit (V104).	Check and replace tubes V101, V102, V103, and V104 (figs. 56 and 84). Check voltage and resistance at sockets of V101, V102, V103, and V104 (figs. 48 and 65 and par. 105). Replace faulty parts associated with circuits.
	Defective antenna connections	Check and repair J101 and J301 (figs. 20, 22, 76, and 84).
7. Receiver operates in all positions of S108, except CAL position, on all bands.	Defective crystal calibrator oscillator circuit (V112).	Check and replace V112 (figs. 61 and 84). Check voltage and resistance at socket of V112 (figs. 62 and 65 and par. 105). Correct voltage at pin 6 of V112 will be proof that oscillator is operating normally. Replace faulty parts.
	Defective function switch (S108)	If there is no voltage (1.3 v) at pin 7 of V112, check filament connection through TB102 and section 3-rear of S108 (figs. 36, 61, and 84). Correct faults.
	Defective wiring	Check continuity from V112 to V101 through E103, to E128 (figs. 62 and 84). Correct faults.
8. Receiver operates properly in all positions of S108, except MONITOR position, on all bands.	Defective function switch (S108)	Check and repair section 3-front of S108 (figs. 28 and 84).
9. Receiver operates properly in all positions of S108, except MONITOR, WHITE, and RED position, on all bands.	Defective sense amplifier circuit (V108).	Check and replace V108 (figs. 56 and 84). Check voltage and resistance at socket of V108 (figs. 33, 56, and 65 and par. 105). Check continuity from pin 6 of V108 to sense antenna contact of J101 (figs. 56, 57, and 84). Replace faulty parts associated with circuit.
10. Receiver operates properly in all positions of S108, except DF position, on all bands.	Defective function switch (S108)	Check and repair section 1-front and section 2-front of S108 (figs. 28 and 84).
11. Receiver operates properly in all positions of S108, except DF, WHITE, and RED positions on all bands.	Defective function switch (S108) and associated wiring.	Check continuity across loop contacts of J101 (figs. 50 and 84). If open, check S108 connection to J101 through E101 and E102 (fig. 84). Correct faults.
	Defective BAND SWITCH (S107).	If S108 checks correctly, then check connections from E101 and E102 to section 3-front and section 4-front of S107 (figs. 34 and 84). Correct faults.
	Defective antenna connections	If S108 and S107 check correctly then check J101 and J301 (figs. 20, 22, 50, 76, 84). Correct faults.
12. Meter (M101) indicates correctly in IND position, but no signal is heard on any band. SENSITIVITY control (R171) operates properly.	Defective am-fm switch (S101)	Check and repair section A1 of S101 (figs. 43, 59, 60, 84).
	Defective 1st audio amplifier circuit (V114).	Check and replace faulty tube V114 (fig. 58). Check voltage and resistance at socket of V114 (figs. 44, 59, 65, and 84 and par. 105). Replace faulty parts.
	Defective audio output amplifier circuit (V115).	Check and replace V115 (fig. 58). Check voltage and resistance at socket of V115 (figs. 45, 59, 65, 84 and par. 105). Check audio output transformer T112 for open primary (par. 106*a*). Replace faulty parts.
	Defective headset	Check headset and cord for open leads. Repair or replace (fig. 14).

Symptom	Probable trouble	Correction
13. No output on bands 2 and 7 (fm operation) but output on all other bands.	Defective if amplifier circuits (V105, V106, and V107).	Check and replace tubes V105, V106, and V107 (fig. 58). Check voltage and resistance at sockets of V105, V106, V107 (figs. 40, 58, 59, 60, 65, and 84 and par. 105). Check all sections of S101. Replace faulty parts.
14. Normal output on bands 2 and 7 (fm operation) but no output on all other bands.	Defective if amplifier circuits (V109 and V110).	Check and replace tubes V109, V110 (fig. 58). Check voltage and resistance at sockets of V109 and V110 (figs. 39, 58, 59, 60, 65, and 84 and par. 105). Replace faulty parts.
	Defective if transformers (T101, T102, and T103).	Check resistance of T101, T102, and T103 (par. 106*a* and figs. 39, 58, 59, 60, and 84). Check connection to pin 4 of V111. Replace faulty parts.
15. No output on band 2 but normal output on band 7 (fm operation).	Defective if transformers (T104, T106, T108, and T110).	Check resistance of T104, T106, T108 and T110 (par. 106*a* and figs. 48, 58, 59, 60, and 84). Check connections to pins 2, 3, 6 of V111. Replace faulty parts.
	Defective am-fm switch (S101)	Check all sections of S101 and replace faulty parts (figs. 40, 60, and 84).
16. Normal output on all bands, except band 7 (fm operation).	Defective descriminator circuit (CR102, CR103).	Check and replace faulty crystals CR102, and CR103 (figs. 41, 60, and 84). Replace faulty parts.
	Defective am-fm switch (S101)	Check all sections of S101 (figs. 40, 60, and 84). Replace faulty parts.
	Defective if transformer (T105, T107, T109, T111).	Check resistance of T105, T107, T109, T111 (par. 106*a* and figs. 40, 58, 60, and 84). Replace faulty parts.
17. Normal output on band 7 (fm operation), but no output on other bands.	Defective detector circuit (V111)	Check and replace tube V111 (fig. 52). Check voltage and resistance at socket of V111. Check sections A1 and B2 of S101 (figs. 43, 58, 65, 84 and par. 104). Replace faulty parts.
18. Distorted output on avc (am) operation.	Defective avc voltage circuit (CR101).	Check and replace crystal CR101 (figs. 48, 59, and 84). Check continuity through S101. Replace faulty parts.
19. Distorted output on mvc, avc (am) operation.	Defective rf and if. bias circuit	Check avc line to ground for short. If shorted, check decoupling capacitors. Check for faulty rf or if. tubes V101, V102, V103, V105, V106, V107, V109, V110 (figs. 48, 55, 56, 57, 58, 59, 60, and 84). Check continuity through S106. Replace parts.
20. Meter (M101) indicates properly in C position, but output is distorted on mvc (am) operation.	Defective mvc circuit	Check for −6 volt at high side of R171. Check R171, R170, and S106 (figs. 55 and 84). Replace parts.
21. Distorted weak output on all bands and methods of operation.	Defective 1st audio amplifier circuit (V114).	Refer to symptom 12 above.
	Defective audio output amplifier circuit (V115).	Check and replace tube V115 (fig. 58). Check voltage and resistance of socket of V115 (figs. 45, 58, 59, 65, and 84 and par. 105).
		Check for partly shorted primary or secondary of T112 (par. 106*a*). Replace faulty parts associated with circuit.
	Defective am-fm switch (S101)	Refer to symptom 12 above.
22. Distorted or weak output only on am operation.	Defective detector circuit (V111)	Refer to symptom 17 above.

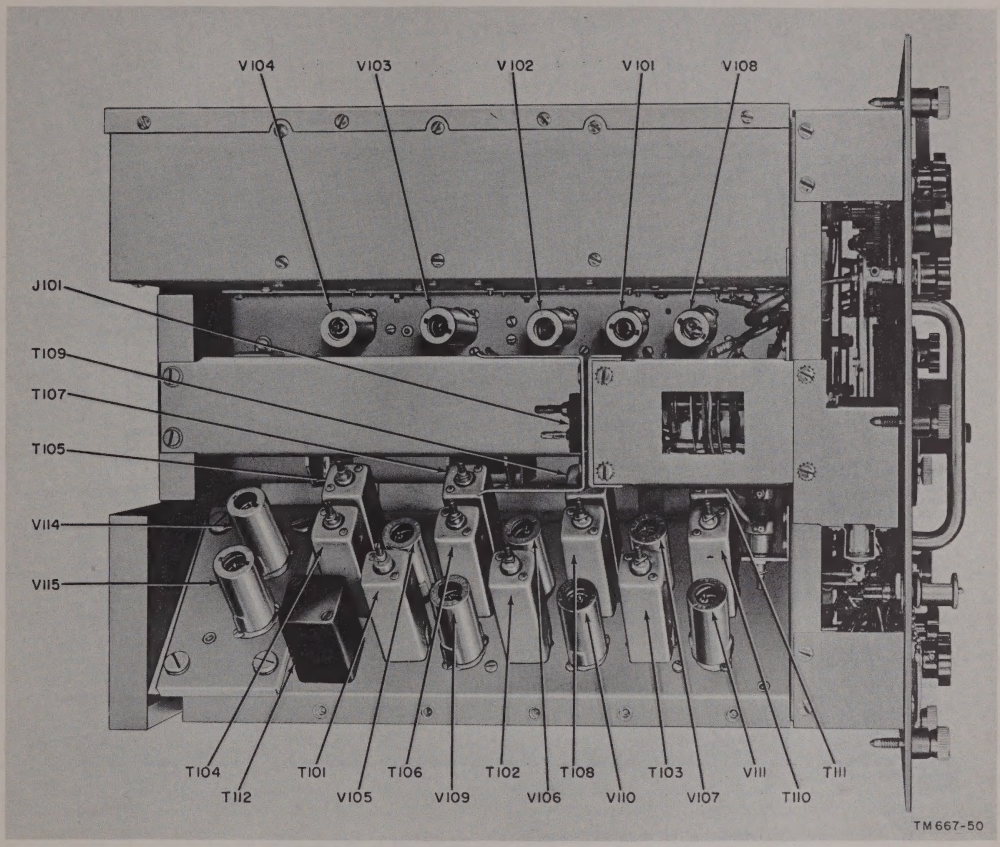

Figure 50. Radio Receiver R–395/PRD–1, top view.

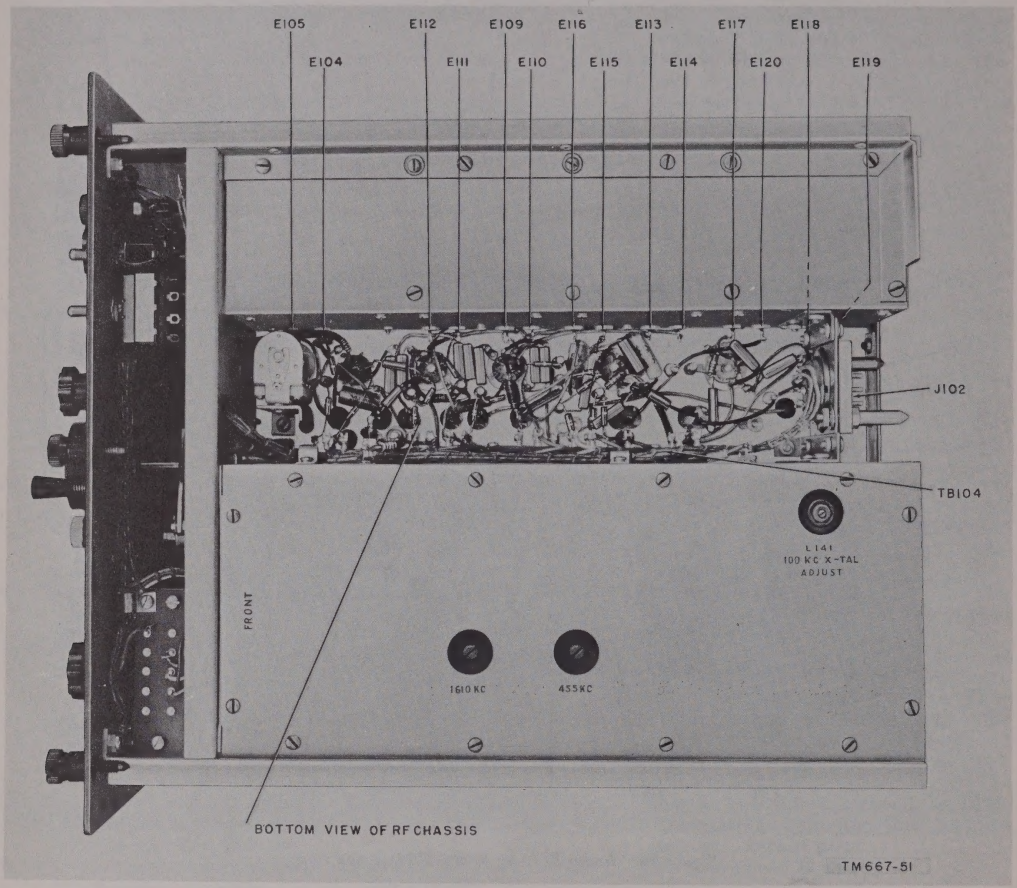

Figure 51. Radio Receiver R–395/PRD–1, bottom view.

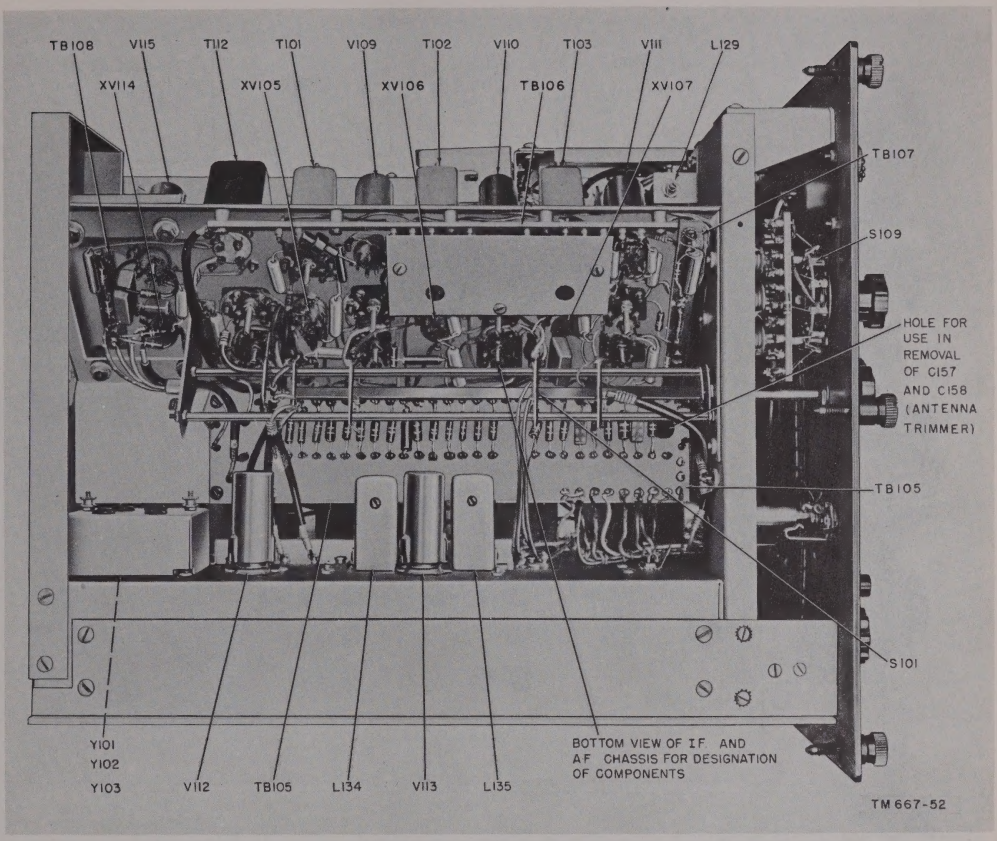

Figure 52. Radio Receiver R-395/PRD-1, left-side view.

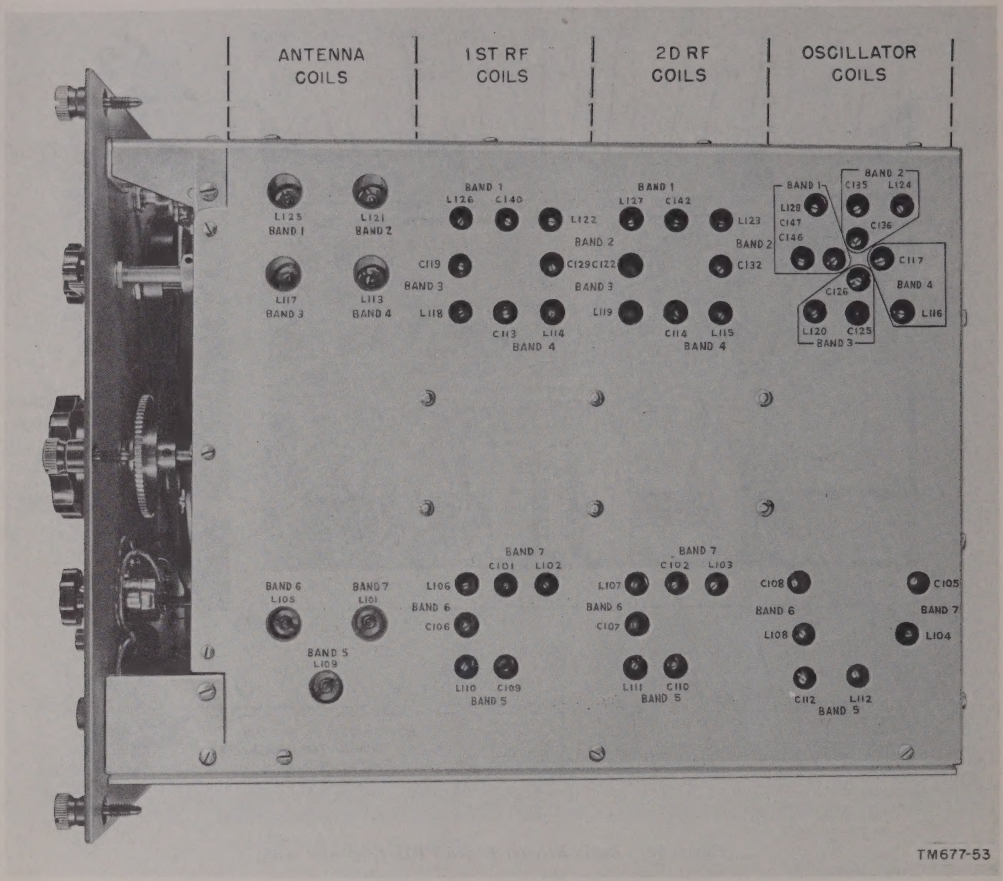

Figure 53. Radio Receiver R-395/PRD-1, right-side view with cover plate attached.

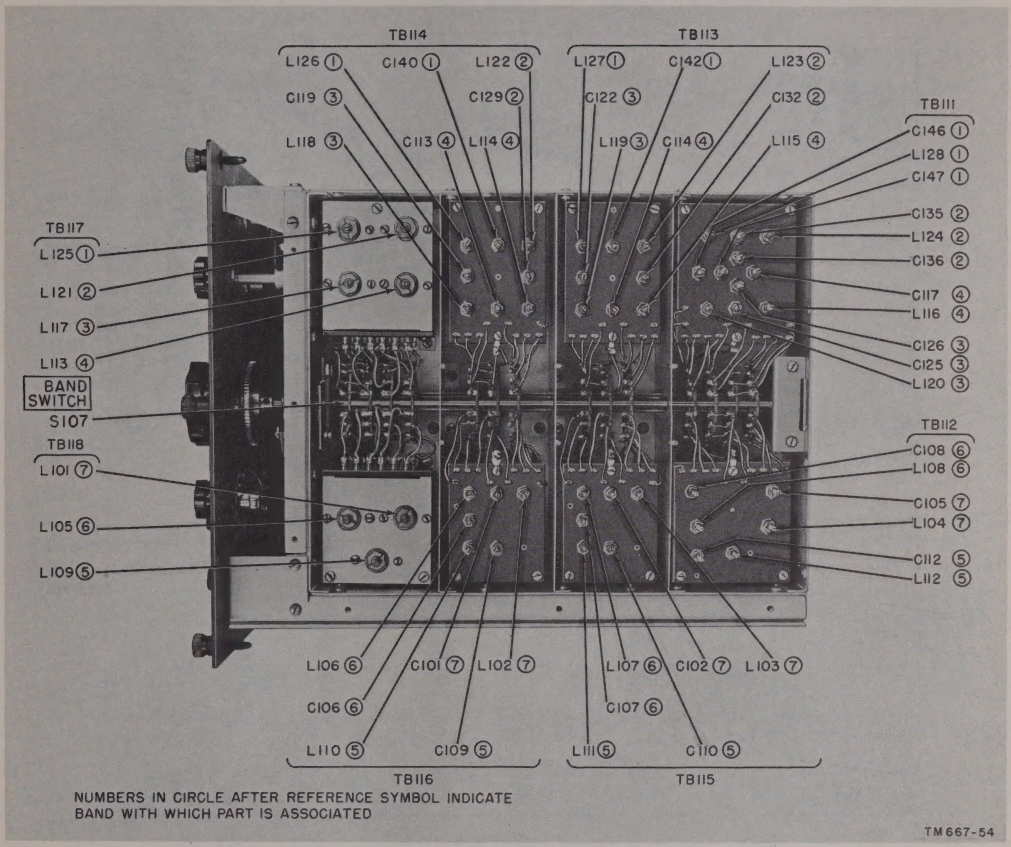

Figure 54. Radio Receiver R-395/PRD-1, right-side view with cover plate removed.

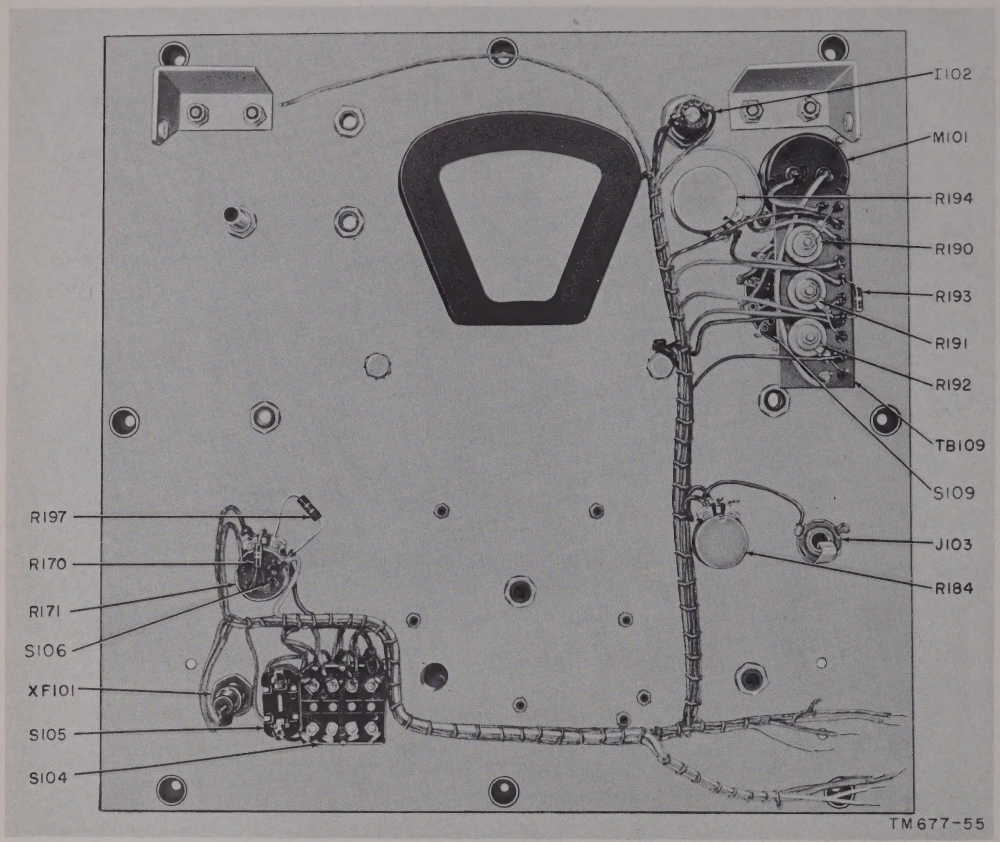

Figure 55. Radio Receiver R-395/PRD-1, rear-view of front panel.

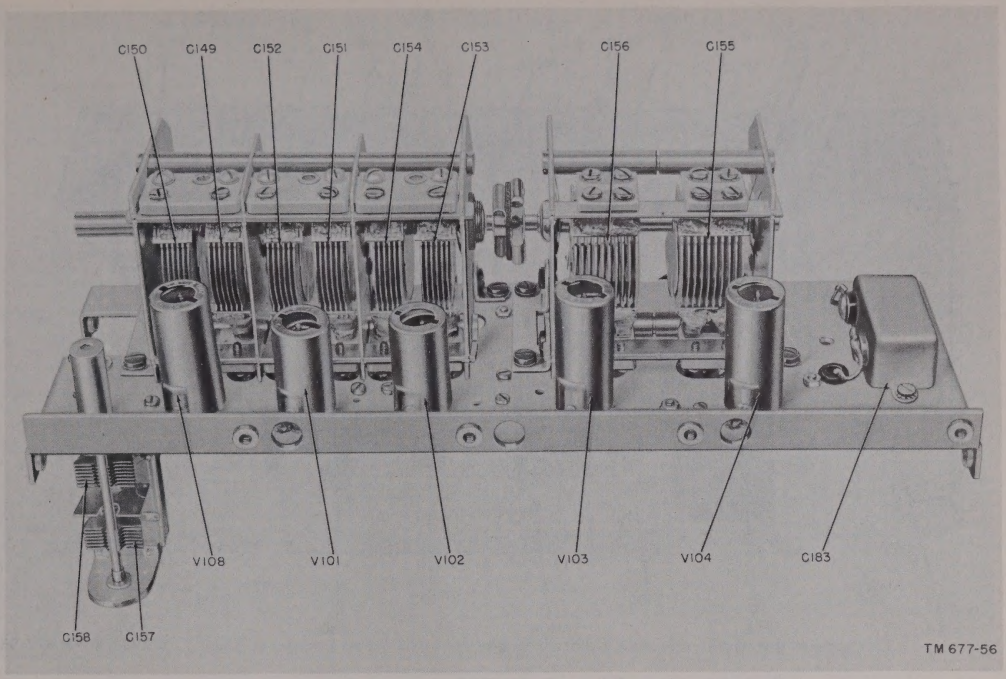

Figure 56. Radio Receiver R–395/PRD–1, rf chassis, top view.

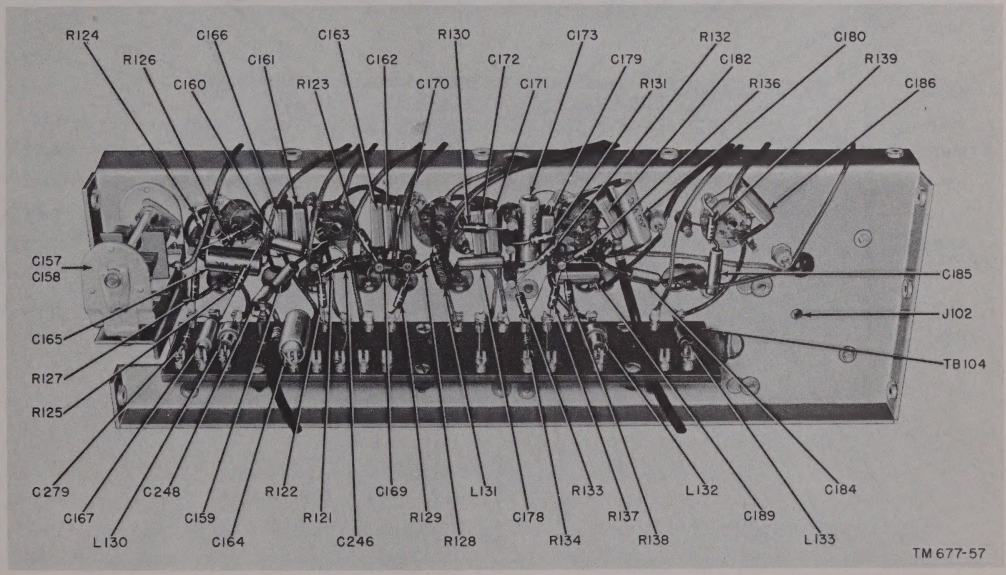

Figure 57. Radio Receiver R–395/PRD–1, rf chassis, bottom view.

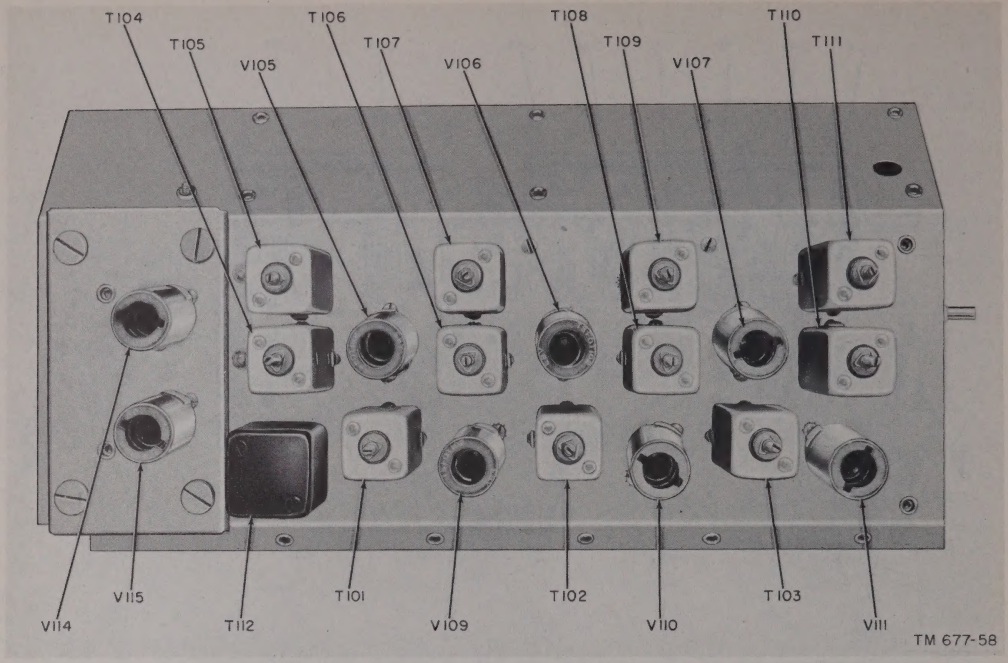

Figure 58. Radio Receiver R–395/PRD–1, if. and af chassis, top view.

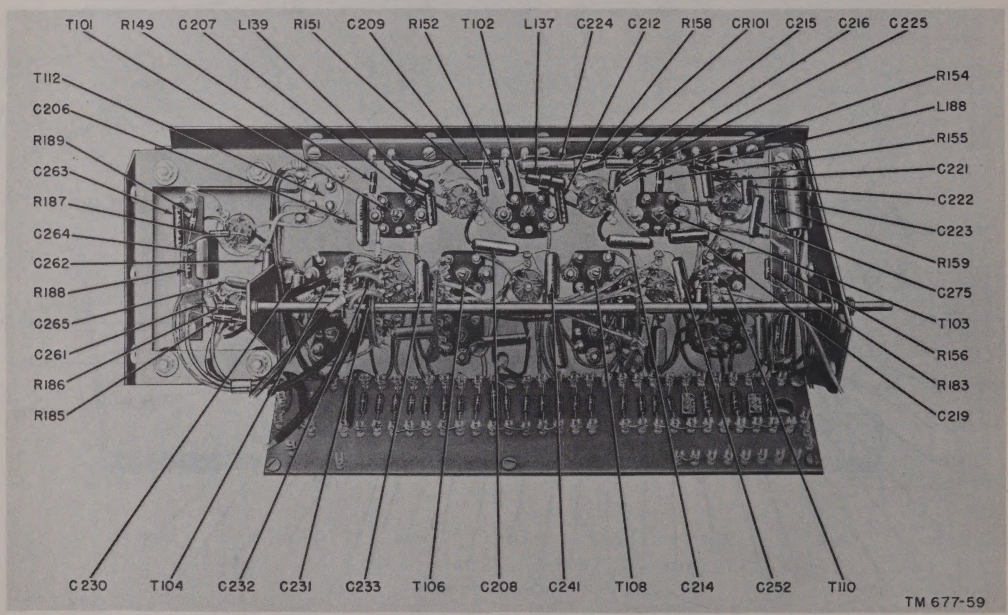

Figure 59. Radio Receiver R–395/PRD–1, if. and af chassis, bottom view (upper-half components).

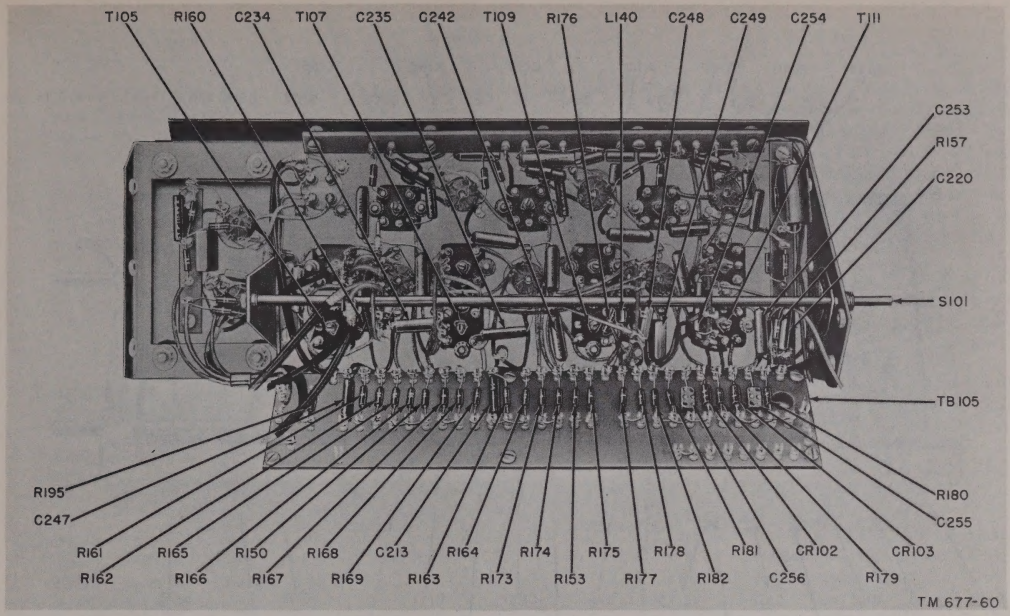

Figure 60. Radio Receiver R–395/PRD–1, if. and af chassis, bottom view (lower-half components).

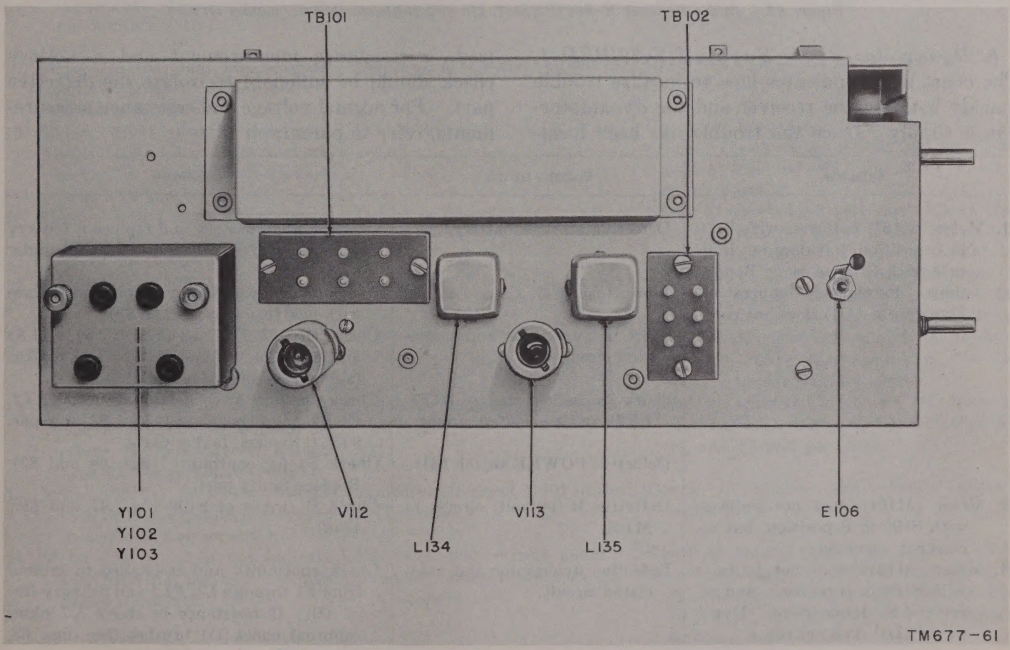

Figure 61. Radio Receiver R–395/PRD–1, bfo and calibrate chassis, top view.

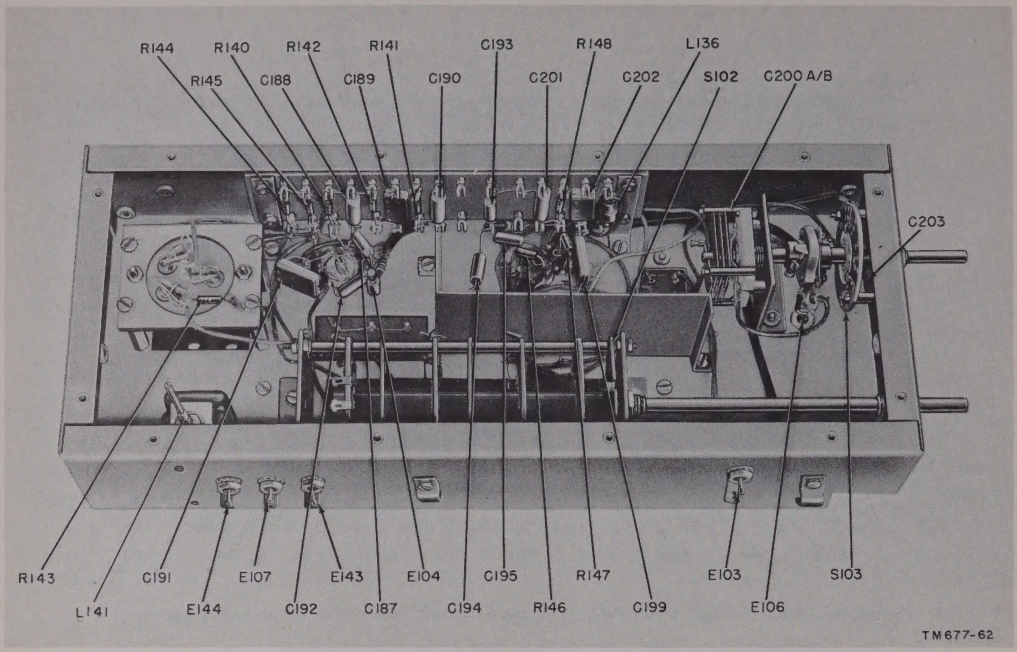

Figure 62. Radio Receiver R–395/PRD–1, bfo and calibrate chassis, bottom view.

b. Dynamotor-Power Supply DY–79/PRD–1. The chart below indicates how to localize trouble quickly between the receiver and the dynamotor-power supply. Once the trouble has been localized, a resistance measurement and a voltage check should be sufficient to isolate the defective part. For normal voltage and resistance measurements, refer to paragraph 105.

Symptom	Probable trouble	Correction
1. Meter (M101) indicates with S109 in C position, but does not indicate with S109 in A or B positions. Receiver is inoperative. Dynamotor (D1) does not run.	Defective storage battery	Check storage battery and replace if battery does not deliver 20 volts minimum under load.
	Blown fuse (F1)	Check for short. Remove short and replace with new fuse (figs. 28 and 83).
	Short in dynamotor and associated circuit.	Check D1, C2, FL1, L3 (figs. 63, 64, and 83 and par 99*b*). Remove short and replace faulty parts of dynamotor.
	Short in ballast tubes (RT1, RT2) and associated circuit.	Check for short at sockets of RT1 and RT2. Check C3 (figs. 63, 64, and 83 and par. 99*b*). Replace faulty parts.
	Defective POWER switch (S1)	Check S1 for continuity (figs. 64 and 83). Replace faulty part.
2. Meter (M101) does not indicate with S109 in B position, but receiver is operative.	Defective B (90-volt) circuit of M101.	Check B circuit of S109 (figs. 47 and par. 101*d*).
3. Meter (M101) does not indicate with S109 in B position, and receiver is inoperative. Dynamotor (D1) does not run.	Defective dynamotor and associated circuit.	Check continuity and resistance to ground from F1 through L3, FL1 and primary (lv) of D1. If resistance is above 5.7 ohms (approx) check D1 brushes (lv) (figs. 63, 64, and 83 and par. 99).

Symptom	Probable trouble	Correction
4. Meter (M101) does not indicate with S109 in B position, and receiver is inoperative. Dynamotor is running.	Defective dynamotor and associated circuit.	Check D1 brushes (hv). Check continuity through L1 from red lead of D1 to high side of R1, R2, R3, and R4. Check for shorted C7 and open R25 (figs. 63, 64, and 83 and par. 98*c*). Replace faulty parts.
	Defective current tubes (V1, V2) control tube (V3) and associated circuits.	Check and replace V1, V2, V3. Check voltage and resistance at sockets of V1, V2, V3 (figs. 63, 64, 66, and 83 and par. 105). Replace faulty parts.
	Defective J3	Check continuity from pins 3 and 8 of V1 and V2 to S104 (B+ section) through pin C of J3, J401, J303, J302, and J102 (figs. 17, 20, 22, 55, 83, and 84). Replace faulty parts.
5. Indicator light (I 1) does not light. Ballast tube RT1 is hot.	Defective I 1 and associated circuits.	Check and replace I 1 (fig. 64). Check I 1 socket and connections (figs. 17, 63, and 83).
6. Indicator light (I 1) is excessively bright.	Defective 6-volt line	Check for open 6-volt line. Check continuity pin B of J3. J402, J401, J303, J302, and J102 (figs. 17, 20, 64, 83, and 84). Replace faulty parts.
7. Indicator light (I 1) does not light. Ballast tube RT1 is cold. Meter (M101) does not indicate with S109 in B position.	Defective ballast tube (RT1) circuit.	Check for burned-out RT1. Check socket of RT1 and associated wiring (figs. 63, 64, and 83). Replace faulty parts.
8. Indicator light (I 1) does not light. Ballast tube RT1 is brighter than ballast tube RT2. Dynamotor is running. Meter (M101) does not indicate with S109 in B position.	Shorted 6-volt line	Check heater connections of V1, V2, V3. Check for short at pin B of J3, J402, J401, J303, J302, and J102 (figs. 17, 20, 22, 63, 83, and 84 and par. 101*b*). Replace faulty parts.
9. Meter (M101) does not indicate with S109 in A position but receiver is operative.	Defective A (1.3-volt) circuit of M101.	Check for shorts and remove (par. 101*c*).
10. Meter (M101) does not indicate with S109 in A position and receiver is inoperative. Ballast tube RT2 is cold.	Defective ballast tube RT2 circuit.	Check for burned-out RT2 or open 1.3-volt line. Check socket of RT2 and associated wiring (figs. 63, 64, and 83). Replace faulty parts.
11. Meter (M101) does not indicate with S109 in A position and receiver is inoperative. Ballast tube RT2 is warm.	Defective 1.3-volt line	Check for shorted 1.3-volt line. Check continuity from test point D (fig. 83) to 1.3-volt section of S104 through pin D of J3, J402, J401, J303, J302, and J102 (figs. 17, 20, 22, 55, 63, 83, and 84). Check for shorts in R17 through R22 circuit of dynamotor; also for shorts in receiver (refer to above figures and pars. 99*e* and 101*c*). Replace faulty parts.
12. Meter (M101) does not indicate with S109 in A position, and receiver is inoperative. Ballast tube RT2 is excessively bright.	Defective ballast tube (RT2) circuit.	Check for shorted C3. Check for shorts at socket of RT2 or high side of R17 (figs. 63, 64, and 83 and par. 99*e*).
13. Meter (M101) does not indicate with S109 in C position, but mvc control operates correctly.	Defective circuit of M101 in the C position.	Check C circuit (par. 101*f*). Replace faulty parts.
14. Meter (M101) does not indicate with S109 in C position, and mvc does not operate.	Defective bias circuit connection dynamotor-power supply to receiver.	Check continuity from high side of C16 to −6-volt section of S104 through pin E of J3, J402, J401, J303, J302, and J102 (figs. 17, 20, 22, 55, 63, 83, and 84). Replace faulty parts.

Symptom	Probable trouble	Correction
15. Meter (M101) reads low with S109 in B position and does not indicate, or indicates low, with S109 in C position.	Defective bias battery (BT1)	Check for low or dead BT1. Replace (fig. 63).
	Open bias circuit	Check plug P2 for open connection or corroded contacts at pin 1 and 5. Check for continuity through 6-volt section of S1 (figs. 63, 64, and 83). Clean or replace faulty parts.
	Shorted bias circuit	With dynamotor-power supply disconnected from receiver, check for short at S1, C16 and pin E of J3 (figs. 64 and 83). If not shorted, then check for short in receiver. Check pin E of J402, J401, J303, J302, J102 (figs. 17, 20, 22, 64, 83, and 84 and par. 101*f*). Replace faulty parts.

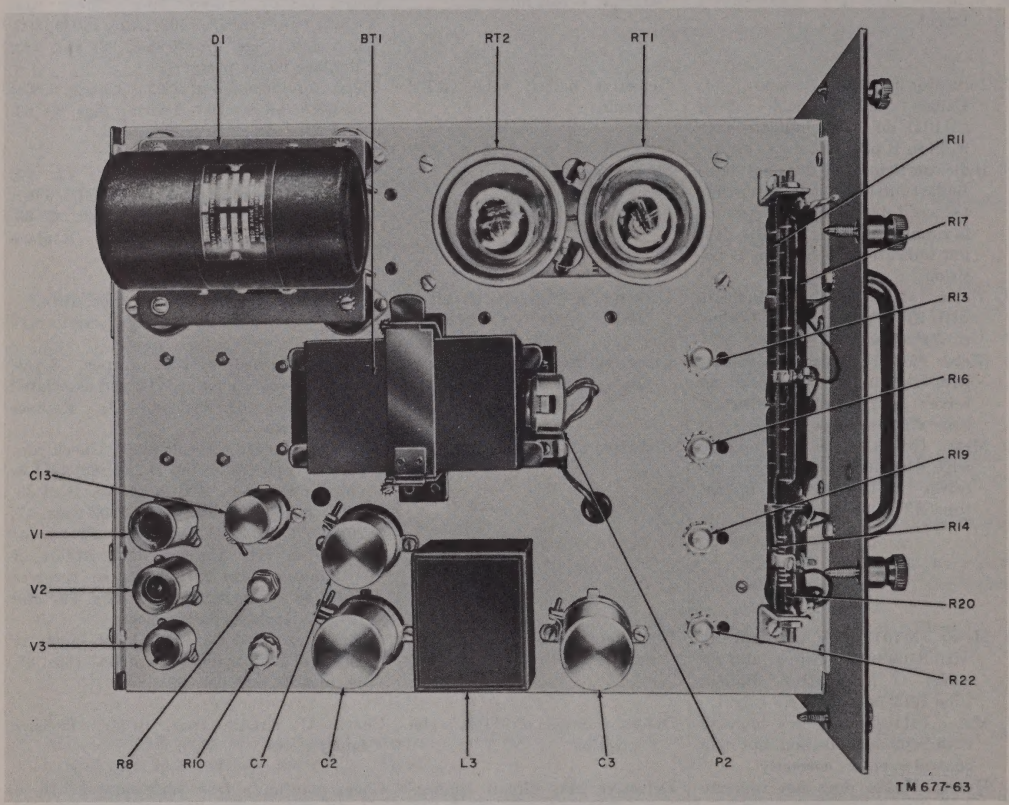

Figure 63. Dynamotor-Power Supply DY–79/PRD–1, top view.

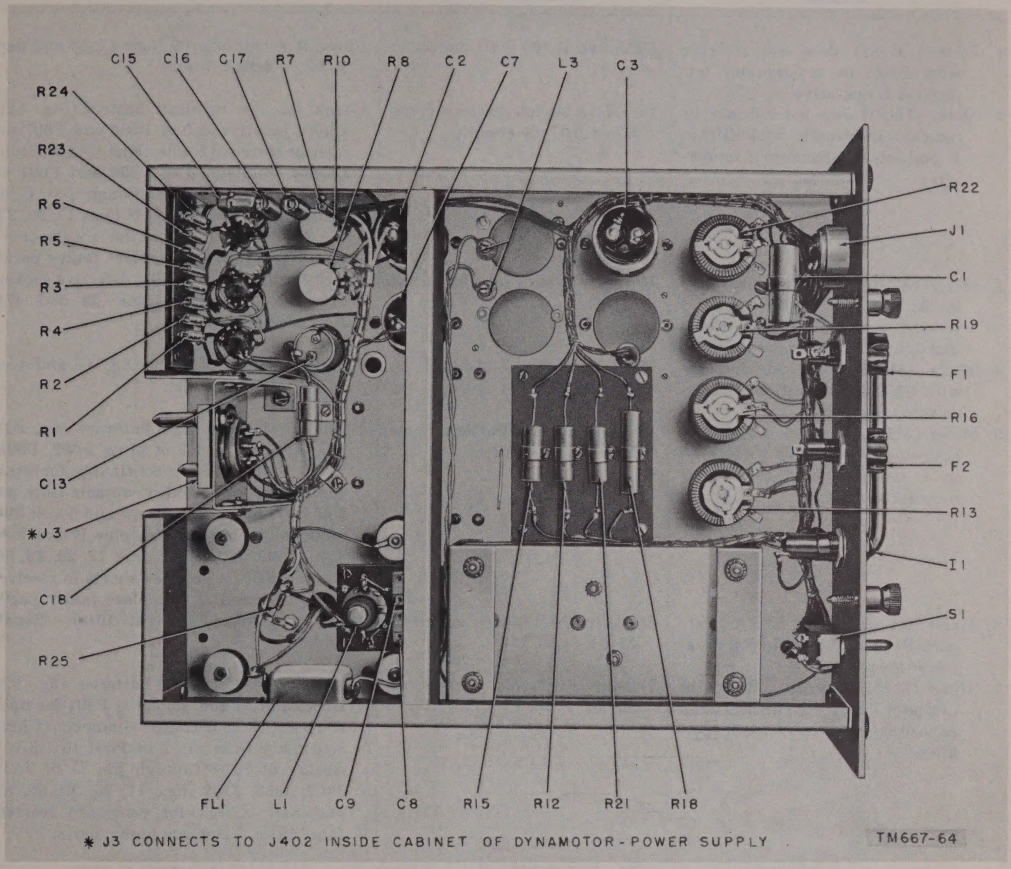

Figure 64. Dynamotor-Power Supply DY–79/PRD–1, bottom view.

c. Battery Box CY–947/PRD–1. The chart below indicates how to localize the trouble quickly between the radio receiver and the battery box. Once the trouble has been localized, a voltage and resistance measurement check should be sufficient to isolate the defective part or battery. For normal voltage and resistance measurements refer to paragraph 105.

Symptom	Probable trouble	Correction
1. Meter (M101) does not indicate with S109 in B position, but receiver is operative.	Defective B (90-volt) circuit of M101.	Check B circuit of S109 (figs. 47, 55 and par. 101*d*). Repair faults.
2. Meter (M101) does not indicate, or indicates incorrectly, with S109 in B position and receiver is inoperative.	Defective 90-volt battery (type BA–419/U) or circuit.	Check for low or dead battery (fig. 82). Check pins 1 and 5 of P606 and P607 for open or corroded connections. Check continuity from pin 5 of P606 and P607 to B+ section of S104 through pin C of J601, J302, J303, and J102 (figs. 17, 20, 22, 55, 82, and 84). Check for shorts in receiver (par. 101*d*). Replace faulty parts.
3. Meter (M101) indicates with S109 in A, B, or C positions, and receiver is operative, but tuning dial light (I101) does not indicate.	Defective tuning dial light (I101).	Check for burned-out I101, defective socket, or open connections (figs. 28 and 47). Replace faulty parts.
4. Meter (M101) does not indicate with S109 in C position, but receiver is operative.	Defective C circuit of M101_____	Check C circuit of S109 (fig. 47 and par. 101*e*). Repair faults.
5. Meter (M101) does not indicate, or indicates incorrectly, with S109 in C position, and receiver is inoperative.	Defective 6-volt battery (type BA–404/U) or circuit.	Check for low or dead batteries (fig. 82). Check pins 1 and 2 of plugs P602, P603, P604, P605. Check continuity for open connections or corroded contacts from pin 1 of P604 to 6-volt filament and 6-volt bias sections of S104 through pins B and E of J601, J302, J303, J102 (figs. 17, 20, 22, 55, 82, and 84). Check for shorts in receiver (par. 101*b* and *e*). Replace faulty parts.
6. Meter (M101) does not indicate with S109 in A position, but receiver is operative.	Defective A (1.3-volt) circuit of M101.	Check A circuit of S109 (par. 101*e*). Repair faults.
7. Meter (M101) does not indicate, or indicates incorrectly with S109 in A position, and receiver is inoperative.	Defective 1.5-volt battery or circuit.	Check for low or dead batteries (fig. 82). Check pins 1 and 2 of plug P601 for open connections or corroded contacts. Check continuity from pin 2 of P601 to 1.5-volt section of S104 through pin D of J601, J302, J303, J102 (figs. 17, 20, 22, 55, 82, and 84). Check for shorts in receiver (par. 101*c*). Replace faulty parts.

CRYSTAL CALIBRATOR OSCILLATOR TUBE (V112)

SWITCH SETTINGS			PINS						
BAND	CRYSTAL FREQUENCY		1	2	3	4	5	6	7
1,2,3	(Y103) 100KC	VOLTAGE	GRD	48V	58V	NC	GRD	-9.4V	1.3V
		RESISTANCE		150K	250K			300K	1.6
4,5	(Y102) 1.3MC	VOLTAGE	GRD	40V	46V	NC	GRD	-6.8V	1.3V
		RESISTANCE		150K	250K			100K	1.6
6,7	(Y101) 4MC	VOLTAGE	GRD	40V	48V	NC	GRD	-4.9V	1.3V
		RESISTANCE		150K	250K			100K	1.6

SEE NOTE 1

BEAT-FREQUENCY OSCILLATOR TUBE (V113)

SWITCH SETTINGS			PINS						
BAND	AM-FM	BFO PITCH	1	2	3	4	5	6	7
1	(1,610 KC)	OFF	VOLTAGE	0V	90V	0V	0V	0V	90V	0V
			RESISTANCE	44	160K	100K	22	100K	160K	0
1	(1,610 KC)	ON	VOLTAGE	1.15V	18V	0V	1.15V	-58	18	0V
			RESISTANCE	23	160K	100K	1.5	100K	160K	0
2	(455 KC)	OFF	VOLTAGE	0V	90V	0V	0V	0V	90V	0V
			RESISTANCE	0	160K	100K	22	100K	160K	44
2	(455 KC)	ON	VOLTAGE	0V	27V	-3.6V	1.15V	0V	27V	1.15V
			RESISTANCE	0	160K	100K	1.5	100K	160K	23

SEE NOTE 2

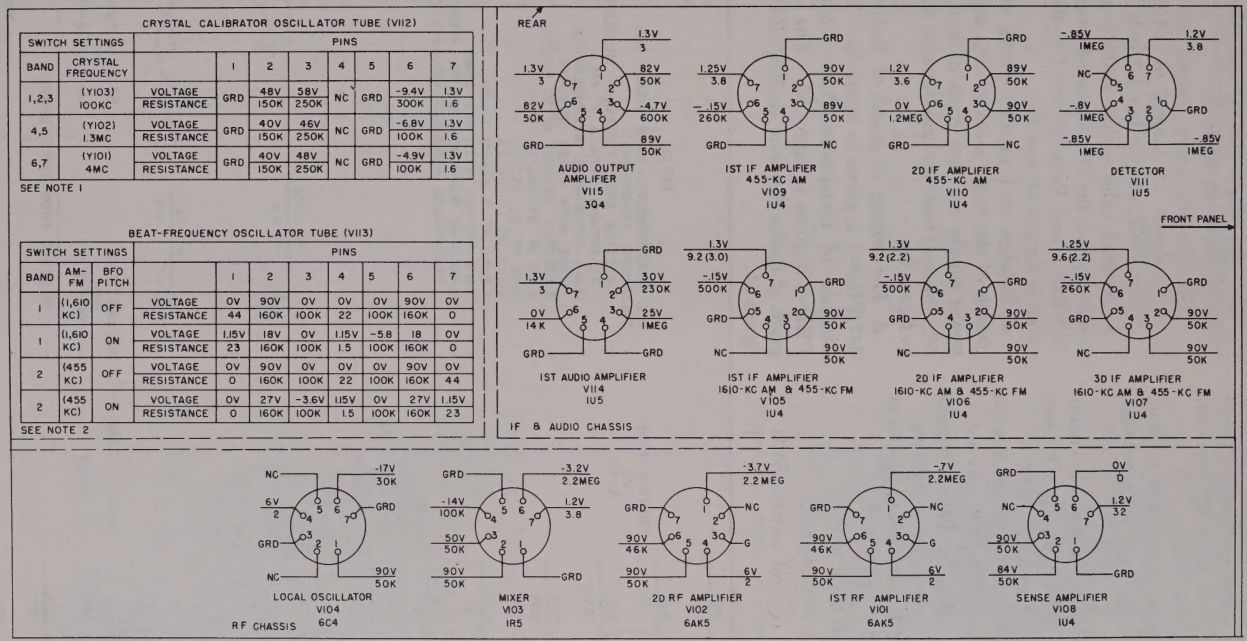

NOTES:

1. FOR THESE MEASUREMENTS SET THE FUNCTION SWITCH TO DF, THE AM-FM SWITCH TO AM, AND THE BFO PITCH CONTROL TO OFF.
2. FOR THESE MEASUREMENTS SET THE FUNCTION SWITCH TO DF.

TM 677-65

Figure 65. Radio Receiver R-395/PRD-1, tube socket voltage and resistance diagrams.

105. Voltage and Resistance Measurements

a. Normal tube socket voltage and resistance measurements for Radio Receiver R–395/PRD–1 are given in figure 65. These measurements are made under the following conditions:

(1) All measurements are made with a vtvm.

(2) All measurements are made with vacuum tubes in sockets.

(3) All resistance measurements are made with POWER switch S104 in OFF position.

(4) All voltage measurements are made with POWER switch S104 in ON position.

(5) Measurements for rf, if., and audio chassis are made with controls set as follows:

(*a*) BAND SWITCH (S107–S102) to band 1.

(*b*) Function switch S108 to df.

(*c*) AM-FM switch S101 to am.

(*d*) BFO PITCH control switch S103 to OFF.

(6) Voltage and resistance measurements for bfo and calibrate chassis, together with the proper BAND and other settings, are shown in figure 65.

(7) The resistance values shown in parenthesis, at pins 7 of V105, V106, and V107, are for band 2 only.

b. Normal tube socket voltage and resistance measurements for Dynamotor-Power Supply DY–79/PRD–1 and Battery Box CY–947/PRD–1 are given in figures 66 and 82.

c. Exterior and interior views of the various chassis of the radio receiver unit and dynamotor-power supply unit are given in figures 50 through 64. Special tools for maintenance work are shown in figure 29.

d. The wiring diagram of Battery Box CY–947/PRD–1 is given in figure 82. The schematic diagram of Dynamotor-Power Supply DY–79/-PRD–1 is given in figure 83. The schematic diagram of Radio Receiver R–395/PRD–1 is given in figure 84.

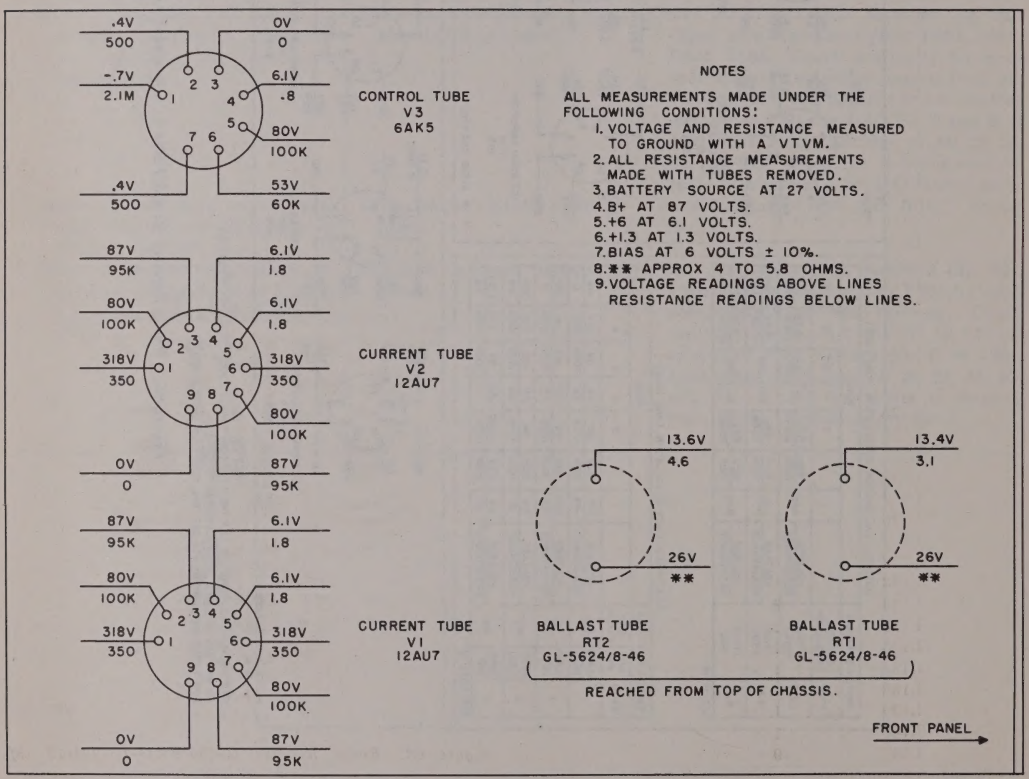

Figure 66. Dynamotor-Power Supply DY–79/PRD–1, tube socket voltage and resistance diagram.

106. Additional Troubleshooting Information

a. Resistances of Transformer Windings and Coils. The dc resistances of transformer windings and coils in the Radio Receiver R–395/PRD–1 are listed below.

Transformer or coil	Primary (ohms)	Secondary (ohms)
T101	5	5
T102	5	5
T103	5	5
T104	1. 1	1. 1
T105	11	11
T106	1. 1	1. 1
T107	11	11
T108	1. 1	1. 1
T109	11	11
T110	1. 1	1. 1
T111	8. 5	8. 5
T112	300	120
L101	[a] 1	[a] 1
L102	[a] 1	[a] 1
L103	[a] 1	[a] 1
L104	[a] 1	
L105	[a] 1	[a] 1
L106	[a] 1	[a] 1
L107	[a] 1	[a] 1
L108	[a] 1	
L109	[a] 1	2
L110	[a] 1	1. 2
L111	[a] 1	1. 2
L112	[a] 1	
L113	[a] 1	1. 4
L114	11	2. 5
L115	11	2. 5
L116	2	2
L117	[a] 1	2. 8
L118	51	3. 5
L119	51	3. 5
L120	6	2. 5
L121	[a] 1	7. 6
L122	58	20
L123	58	20
L124	7	3
L125	[a] 1	57
L126	76	28
L127	76	28
L128	10	8
L129	[a] 1	
L130	1. 3	
L131	[a] 1	
L132	1. 3	
L133	[a] 1	
L134	8	
L135	2	
L136	1. 3	
L137	1. 3	
L138	1. 3	
L139	1. 3	
L140	1. 3	
L141	9	

[a] Values are less than 1 ohm.

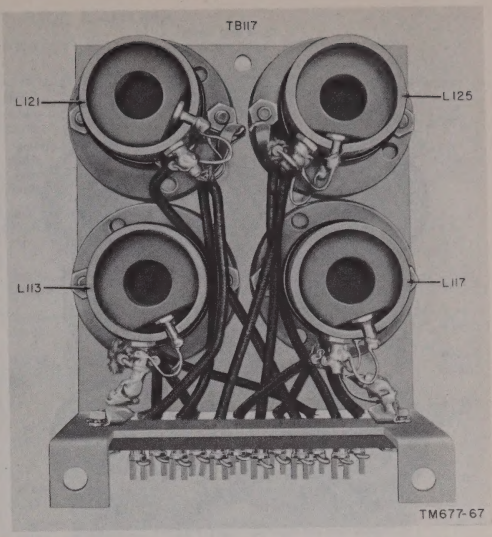

Figure 67. Radio Receiver R–395/PRD–1, TB117 (lf antenna coils).

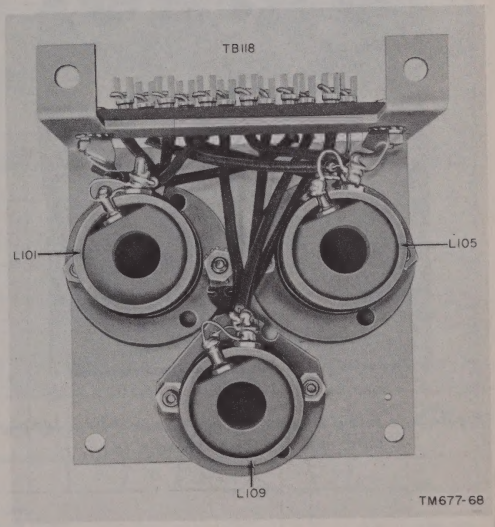

Figure 68. Radio Receiver R–395/PRD–1, TB118 (hf antenna coils).

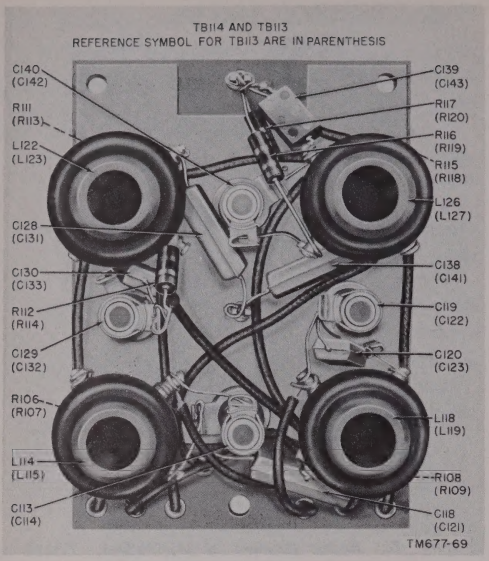

Figure 69. Radio Receiver R-395/PRD-1, TB114 (lf first rf coils) and TB113 (lf second rf coils).

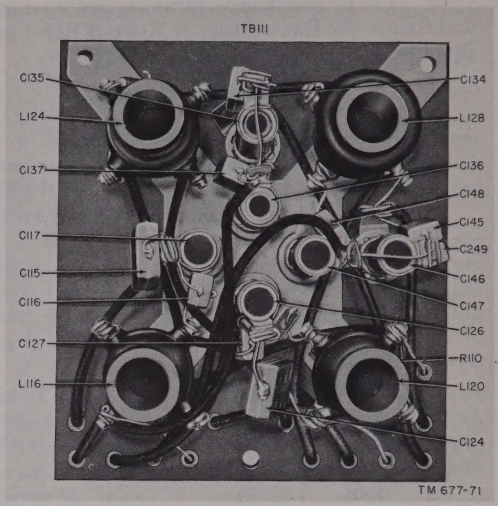

Figure 71. Radio Receiver R-395/PRD-1, TB111 (lf oscillator coils).

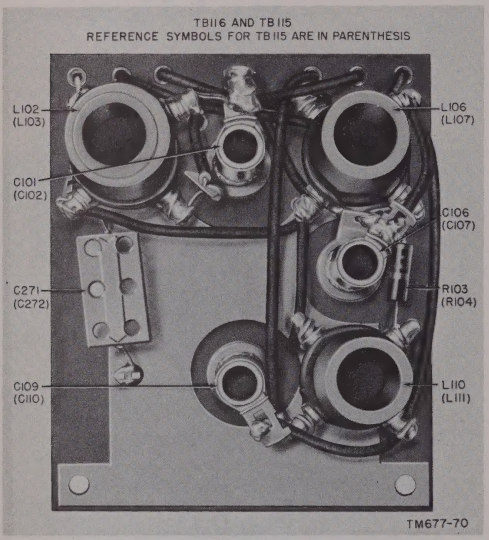

Figure 70. Radio Receiver R-395/PRD-1, TB116 (hf first rf coils) and TB115 (hf second rf coils).

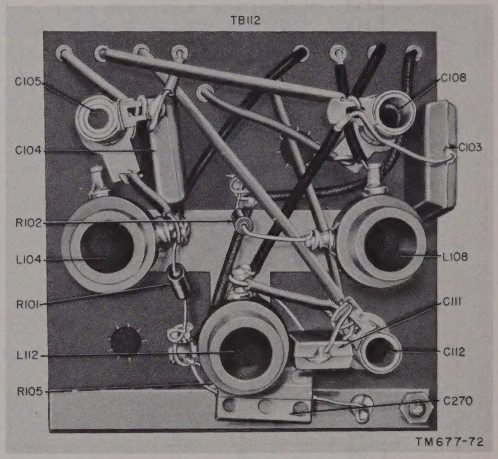

Figure 72. Radio Receiver R-395/PRD-1, TB112 (hf oscillator coils).

CAPACITOR COLOR CODE MARKING
(MIL-STD CAPACITORS)

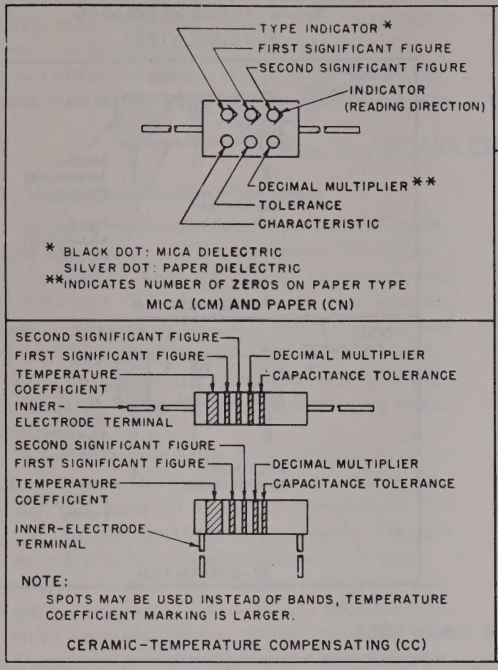

CAPACITOR COLOR CODE

COLOR	SIG FIG.	MULTIPLIER		CHARACTERISTIC[1]				TOLERANCE[2]					TEMPERATURE COEFFICIENT (UUF/UF/°C)
		DECIMAL	NUMBER OF ZEROS	CM	CN	CB	CK	CM	CN	CB	CC		
											OVER 10UUF	10UUF OR LESS	CC
BLACK	0	1	NONE		A			20	20	20	20	2	ZERO
BROWN	1	10	1	B	E	B	W				1		-30
RED	2	100	2	C	H		X	2		2	2		-80
ORANGE	3	1,000	3	D	J	D			30				-150
YELLOW	4	10,000	4	E	P								-220
GREEN	5		5	F	R						5	0.5	-330
BLUE	6		6		S								-470
PURPLE (VIOLET)	7		7		T	W							-750
GRAY	8		8			X						0.25	+30
WHITE	9		9								10	1	-330(±500)[3]
GOLD		0.1						5		5			+100
SILVER		0.01						10	10	10			

1. LETTERS ARE IN TYPE DESIGNATIONS GIVEN IN MIL-C SPECIFICATIONS.
2. IN PERCENT, EXCEPT IN UUF FOR CC-TYPE CAPACITORS OF 10 UUF OR LESS.
3. INTENDED FOR USE IN CIRCUITS NOT REQUIRING COMPENSATION.

STD-C1

Figure 73. MIL-STD capacitor color codes.

RESISTOR COLOR CODE MARKING
(MIL-STD RESISTORS)

AXIAL-LEAD RESISTORS
(INSULATED)

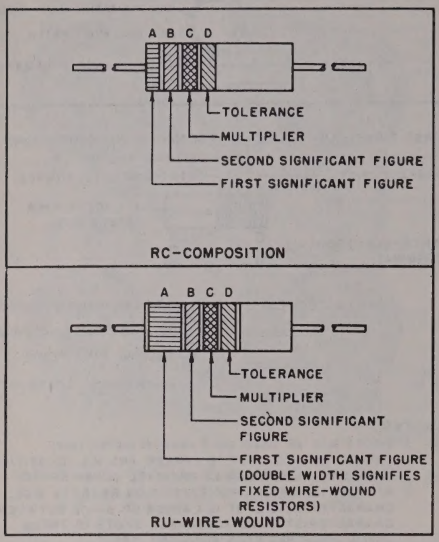

RADIAL-LEAD RESISTORS
(UNINSULATED)

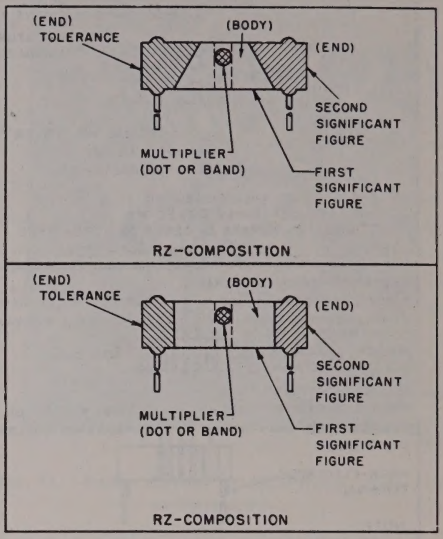

RESISTOR COLOR CODE

BAND A OR BODY*		BAND B OR END*		BAND C OR DOT OR BAND*		BAND D OR END*	
COLOR	FIRST SIGNIFICANT FIGURE	COLOR	SECOND SIGNIFICANT FIGURE	COLOR	MULTIPLIER	COLOR	RESISTANCE TOLERANCE (PERCENT)
BLACK	0	BLACK	0	BLACK	1	BODY	±20
BROWN	1	BROWN	1	BROWN	10	SILVER	±10
RED	2	RED	2	RED	100	GOLD	±5
ORANGE	3	ORANGE	3	ORANGE	1,000		
YELLOW	4	YELLOW	4	YELLOW	10,000		
GREEN	5	GREEN	5	GREEN	100,000		
BLUE	6	BLUE	6	BLUE	1,000,000		
PURPLE (VIOLET)	7	PURPLE (VIOLET)	7				
GRAY	8	GRAY	8	GOLD	0.1		
WHITE	9	WHITE	9	SILVER	0.01		

* FOR WIRE-WOUND-TYPE RESISTORS, BAND A SHALL BE DOUBLE-WIDTH. WHEN BODY COLOR IS THE SAME AS THE DOT (OR BAND) OR END COLOR, THE COLORS ARE DIFFERENTIATED BY SHADE, GLOSS, OR OTHER MEANS.

EXAMPLES (BAND MARKING):
10 OHMS ±20 PERCENT: BROWN BAND A; BLACK BAND B; BLACK BAND C; NO BAND D.
4.7 OHMS ±5 PERCENT: YELLOW BAND A; PURPLE BAND B; GOLD BAND C; GOLD BAND D.

EXAMPLES (BODY MARKING):
10 OHMS ±20 PERCENT: BROWN BODY; BLACK END; BLACK DOT OR BAND; BODY COLOR ON TOLERANCE END.
3,000 OHMS ±10 PERCENT: ORANGE BODY, BLACK END; RED DOT OR BAND; SILVER END.

STD-RI

Figure 74. MIL-STD resistor color codes.

b. Tube and Crystal Replacements. The replaceable vacuum tubes and crystals required and supplied with Direction Finder Set AN/PRD–1 are listed in paragraph 17. The location of each tube and crystal is shown in figures 50, 52, 56, 58, 61, and 63. When removing or replacing tubes and tube shields of V101, V102, V103, V104 and V108 (in the rf sec. of the radio receiver, fig. 50) use the two tube inserter and extractor tools provided (fig. 29).

c. Color Codes. Color codes for capacitors and resistors are given in figures 73 and 74.

Section V. TROUBLESHOOTING TESTS

107. Signal Substitution Procedure

a. Signal substitution requires a source of audio, if., and rf signals. Audio Oscillator TS–382A/U (TM 11–2684A) and RF Signal Generator Set AN/URM–25A (TM 11–5551A) are used for this purpose. Analyzer ZM–3/U (TM 11–5043) and Electron Tube Test Set TV–7/U (TM 11–5083) are useful to isolate and check the defective part after the faulty stage has been indicated by signal substitution.

b. When performing the tests outlined in paragraph 107, use the audio oscillator; when performing the tests outlined in paragraphs 108 through 113, use the rf signal generator. Ground one side of whichever signal generator is used to the receiver chassis and connect the other side through a capacitor. Use a .05-μf capacitor with the audio generator and a .005-μf capacitor with the rf generator. Note the volume and listen for serious distortion in the headset at the various points in the signal substitution procedure. When working back from the output to the input stage, decrease, as much as possible, the output of the signal generator that is being used. Listed below are precautions to be taken during the troubleshooting tests.

(1) If possible, compare the receiver with a receiver known to be in good condition.
(2) Do not remove a tuned unit until the trouble has been traced to that particular unit.
(3) Misalinement of one or more stages of the receiver will cause reduced output.
(4) Misalinement of the local oscillator (V104) may prevent any output.
(5) Be careful not to damage the receiver in any other way.

c. When the trouble is localized to a stage, first test the tube, and then measure the voltage; finally, measure the resistance at the tube socket of that stage. *Remove only one tube at a time when testing.* Check the number of the tube, test the tube, and if it is not defective, return it to its proper socket before another tube is removed. It is possible that a tube can be checked on a tube tester and still be faulty. Replacing a tube with a good spare tube can lead to quicker location of the trouble. Trouble in a circuit or stage may not cause changes in voltage and resistance measurements at the tube socket. The instructions included in this paragraph are merely a guide and should suggest other procedures, such as voltage and resistance measurements on individual parts.

d. At each step it is assumed that all previous steps were completed satisfactorily. Isolate and clear any trouble located before proceeding with any succeeding step. Before proceeding from one step to another, make sure that the receiver control circuits are switched to the proper positions for the condition of signal desired.

108. Audio-Frequency Tests

a. Voltages. Before making the tests listed below, check for B+ voltages at appropriate points and check the filament voltage at the sockets of audio amplifier tubes V114, V115, and detector tube V111. Refer to figures 43, 44, 45, 58, 59, 60, 65, and 84, and paragraph 105.

b. Terminal 6 of V115 (Plate of Audio Output Amplifier). Use the audio generator and apply a signal through a series capacitor (about .05 μf) to terminal 6 of V115. Listen for a signal with the headset connected to OUTPUT jack J103. The volume will be very low. If no signal is heard, inspect the leads to transformer T112, the headset connections, and C264. If C264 is found shorted, T112 may be found open.

c. Terminal 3 of V115 (Grid of Audio Output Amplifier). Place the audio signal on terminals 3 of V115. Listen for an increased output in the headset; this increased output is caused by the amplification of V115. If no signal is heard, check V115, R196, and C276.

d. Terminal 2 of V114 (Plate of First Audio Amplifier). Place the audio signal on terminal 2 of V114 and listen for a signal in the headset. If

a weak signal or no signal, check C262, C265, R187, R188, and R189.

e. Terminal 6 of V114 (Grid of First Audio Amplifier). Place the audio signal on terminal 6 of V114. Make sure that AUDIO VOLUME CONTROL R184 is completely clockwise. The output signal should be much louder than when it was applied to the plate terminal. If there is no signal or a weak signal, check V114, C261, R185, R186 and R195.

f. Terminals 2 and 4 of V111 (Plates of Detector). Place the audio signal alternately on terminals 2 and 4 of V111. Turn the AUDIO VOLUME control (R184) fully clockwise. The audio signal should be heard in the headset. If a weak signal or no signal is heard, check R184 R156, R157, C219, C220, section A1 of S101, and associated wires around the detector circuit.

109. Intermediate-Frequency Tests (455-kc Am If. Amplifiers)

a. Preliminary Steps. Make the audio-frequency tests as directed in paragraph 108. Set the operating controls as follows:

(1) SENSITIVITY control R171 to full clockwise position.
(2) BAND SWITCH S107 to band 1.
(3) AM-FM switch S101 to AM.
(4) AUDIO VOLUME control R184 completely clockwise.
(5) BFO PITCH control switch S103 to OFF.

b. Voltages. Before making the tests listed below, check for B+ voltages at the proper points and filament voltages at sockets of 455-kc am if. amplifiers V109 and V110. Refer to figures 38, 39, 56, 57, 58, 59, 65, and 84.

c. Terminal 2 of V110 (Plate of Second 455-kc Am If. Amplifier). Use the rf generator and place an am modulated 455-kc if. signal through a series capacitor (about .005-μf) on terminal 2 of V110. A weak signal should be heard in the headset. If no signal is heard, check C215, R155, and T103.

d. Terminal 6 of V110 (Grid of Second 455-kc Am If. Amplifier). Place the if. signal on terminal 6 of V110. The output signal should increase in volume. If no output or weak, check V110, C214, and R154.

e. Terminal 2 of V109 (Plate of First 455-kc Am If. Amplifier). Place the if. signal on terminal 2 of V109 and listen for an audio signal in the headset. If no signal is heard, check C209, C212, C213, R152, R153, R164, and T102.

f. Terminal 6 of V109 (Grid of First 455-kc Am If. Amplifier). Place the if. signal on terminal 6 of V109. The output in the headset should increase in volume. If little or no output is obtained, check V109, C208, and R151.

110. Beat-Frequency Oscillator Tests

After terminal 6 of V109 has been properly checked out, remove the internal modulation from the signal generator and leave the unmodulated if. signal on terminal 6 of V109. Turn on BFO PITCH control switch S103 and listen for an audio tone in the headset. As the BFO PITCH control (C200A) is rotated, the pitch of the output should vary in the headset. If no audio output is heard, check the bfo tube (V113), the tube socket voltages at V113, and the bfo circuit. Refer to figures 42, 61, 62, and 65, and paragraph 105. After completing this test successfully, turn the BFO PITCH control switch to OFF.

111. Intermediate-Frequency Tests (1,610-kc Am If. Amplifiers)

a. Preliminary Steps. Make the audio-frequency tests as directed in paragraph 108. Turn BAND SWITCH S107 to band 2.

b. Voltages. Before making the tests listed below, check B+ voltages at the proper points and filament voltages at sockets of 1,610-kc, am if. amplifiers V105, V106, and V107; check the socket of mixer V103. Refer to figures 38, 40, 56, 57, 58, 59, 65, and 84, and paragraph 105.

c. Terminal 2 of V107 (Plate of Third 1,610-kc Am If. Amplifier). Place an amplitude-modulated 1,610-kc if. signal through a series capacitor (about .005 μf) on terminal 2 of V107 and listen for a weak signal in the headset. If no signal is heard, check C253, C275, R178, R183, T110, and sections A1 and A2 of S101.

d. Terminal 6 of V107 (Grid of Third 1,610-kc Am If. Amplifier). Place the 1,610-kc if. signal on terminal 6 of V107. The output in the headset should increase in volume. If a weak signal or no signal is heard, check V107 and tube socket voltages and resistances; check C252 and R177.

e. Terminal 2 of V106 (Plate of Second 1,610-kc Am If. Amplifier). Place the signal on terminal 2 of V106. If a weak signal or no signal is heard, check C242, C243, R174, R175, T108, and sections B1 and B4 of S101.

f. Terminal 6 of V106 (Grid of Second 1,610-kc Am If. Amplifier). Place the signal on terminal 6 of V106. There should be an increased output in the headset. If a weak signal or no signal is heard, check V106 and tube socket voltages and resistance; check C241 and R173.

g. Terminal 2 of V105 (Plate of First 1,610-kc Am If. Amplifier). Place the signal on terminal 2 of V105. If a weak signal or no signal is heard, check C234, C235, R168, R169, and sections C1 and C2 of S101.

h. Terminal 6 of V105 (Grid of First 1,610-kc Am If. Amplifier). Place the signal on terminal 6 of V105. An increased output should be heard in the headset. If the output is low, check V105, C233, R167, and tube socket voltages and resistances.

i. Beat-Frequency Oscillator. To check the bfo, proceed as directed in paragraph 110; keep BAND SWITCH S107 in the band 2 position and apply the unmodulated 1,610-kc signal to terminal 6 of V105.

112. Intermediate-Frequency Tests (455-kc Fm If. Amplifiers)

a. Preliminary Steps. Make the audio-frequency tests as directed in paragraph 108. Set the operating controls as follows:

(1) BAND SWITCH S107 to band 7.

(2) AM-FM switch S101 to FM.

b. Voltages. Before making the tests below, check the B+ voltages at the proper points and the filament voltages at the sockets of 455-kc fm if. amplifiers V105, V106, V107, and at the socket of mixer V103. Refer to figures 38, 40, 56, 57, 58, 60, 65, and 84, and paragraph 105.

c. Terminal 2 of V107 (Plate of Third 455-kc Fm If. Amplifier). Place a modulated 455-kc signal on terminal 2 of V107. If there is no output in the headset, check the discriminator circuit, which consists of C253, C254, C255, C256, C249, T111, CR102, CR103, R178, R180, R181, R182, and sections A1 and A2 of S101.

d. Terminal 6 of V107 (Grid of Third 455-kc Fm If. Amplifier). Place the signal on terminal 6 of V107. The output in the headset should increase in volumn. If little or no output is heard, check V107, C252, and R177.

e. Terminal 2 of V106 (Plate of Second 455-kc Fm If. Amplifier). Place the signal on terminal 2 of V106. If no output is heard in the headset, check R174, R175, R176, C242, C243, T109, and sections B1 and B4 of S101.

f. Terminal 6 of V106 (Grid of Second 455-kc Fm If. Amplifier). Place the signal on terminal 6 of V106. There should be an increased output in the headset. If little or no output is heard, check V106, C241, R173, and tube socket voltages and resistances.

g. Terminal 2 of V105 (Plate of First 455-kc Fm If. Amplifier). Place the signal on terminal 2 of V105. If little or no output is heard in the headset, check R168, R169, R172, C234, C235, T107, and sections C1 and C2 of S101.

h. Terminal 6 of V105 (Grid of First 455-kc Fm If. Amplifier). Place the signal on terminal 6 of V105. An increased output should be heard in the headset. If the output is low, check V105, C233, R167, and tube socket voltages and resistances.

i. Terminal 2 of V103 (Plate of Mixer). Place the 455-kc and 1,610-kc modulated am signals alternately on terminal 2 of V103.

(1) To check the 455-kc am section of the mixer, set BAND SWITCH S107 to either band 1, 3, 4, 5, or 6 and turn am-fm switch S101 to am. If no output is heard, check C206, C207, R149, R150, T101, and D2 of S101.

(2) To check the 455-kc fm if. section of the mixer, set BAND SWITCH S107 to band 7 and turn am-fm switch S101 to fm. If no output is heard, check R160, C230, C231, R161, R162, T105, and section D2 of S101.

(3) To check the 1,610-kc am if. section of the mixer, set BAND SWITCH S107 to band 2 and turn am-fm switch S101 to am. If no output is heard, check the items listed in (2) above.

j. Terminal 6 of V103 (Grid of Mixer). Place the 455-kc and 1,610-kc modulated signals alternately on terminal 6 of V103. Set BAND SWITCH S107 and am-fm switch S101 to the corresponding band and if. frequency positions listed in (1), (2), and (3) above. A signal should be heard in the headset; if not, check V103, C183, R136, and tube socket voltages and resistances.

113. Radio-Frequency Steps

a. Preliminary Steps. Make the audio frequency tests as directed in paragraph 108. Make the intermediate-frequency tests as directed in paragraphs 109 through 112. Set the operating controls as follows:

(1) Set BAND SWITCH S107 to band 3.

(2) Turn AM–FM switch S101 to AM.

b. Voltages. Before making the tests below, check B+ voltages at the proper points and all voltages at the sockets of mixer V103, local oscillator V104, first and second rf amplifiers V101 and V102, and sense amplifier V108.

c. Terminal 6 of V103 (Signal Grid of Mixer). Place an am modulated signal, which is within the frequency of band 3, on terminal 6 of V103 and tune the receiver to this signal. If a weak output or no output is heard, check V103, V104, and associated elements for band 3 operation.

d. Local Oscillator (V104). To check whether or not the local oscillator is oscillating use a vtvm and measure the negative voltage at pin 6 of tube V104 (figs. 37, 65, 56, 57 and 84, and par. 105). Check for a negative voltage at pin 4 of mixer tube V103. To check with Signal Generator AN/URM–25A, use a 1,000-cycle modulated carrier and connect to pin 6 (signal grid) of mixer tube V103. Tune the receiver to the same frequency at which the signal generator is set and listen for a beat note. If the local oscillator is faulty, check V104 and tube socket voltages and resistances; check C183, C185, C277, C137, C138, and R139. Check for shorted variable capacitors C155 and C156. Check the tuning circuit in TB111 and TB112, and sections 11, 12, 13, 14-front of S107.

e. Terminal 5 of V102 (Plate of Second Rf Amplifier). Place the am signal on terminal 5 of V102. If a weak output or no output is heard, check R130 and C173. Check the tuning circuit in TB113 and TB115, and sections 8, 10-front of S107.

f. Terminal 1 of V102 (Grid of Second Rf Amplifier). Place the rf signal on terminal 1 of V102. An increased output should be heard in the headset. If a weak output or no output is heard, check V102 and tube socket voltages and resistances; check associated circuit elements.

g. Terminal 5 of V101 (Plate of First Rf Amplifier). Place the rf signal on terminal 5 of V101. If a weak signal or no signal is heard, check C163 and R123. Check the tuning circuit in TB114 and TB116, and sections 5, 6, 7-front of S107.

h. Terminal 1 of V101 (Grid of First Rf Amplifier). Place the signal on terminal 1 of V101. An increased output should be heard in the headset. If a weak output or no output is heard, check V101 and tube socket voltages and resistances; check the associated circuit elements.

i. Terminal 2 of V108 (Plate of Sense Amplifier). Place the signal on terminal 2 of V108. If little or no output is heard in the headset, check the coupling circuit between V108 and V101.

j. Terminal 6 of V108 (Grid of Sense Amplifier. Turn function switch S108 to the MONITOR position. Place the signal on terminal 6 of V108. If there is no increase in output, check V108, C166, C168, R125, R126, R127, and tube socket voltages and resistances.

k. Antenna. With function switch S108 in the MONITOR position, connect the am rf signal to the sense antenna terminal on the receiver. If weak or no signal, check R124 and sections 3-front, 3-rear of S108. With function switch S108 in the DF position, connect the am rf signal first to one of the loop antenna terminals, and then to the other. If one of the loop terminals sounds weak or no signal is heard and the other loop terminal shows a normal signal, check the corresponding branch circuit for a faulty terminal (J101, section 2-front of S108, E102, section 3-front of S107, TB117 or TB118 for one of the terminals; and J101, section 1-front of S108, E101, section 4-front of S107, TB117 or TB118 for the other terminal). If weak or no signal at either terminal, check antenna coils on TB117 or TB118; check sections 1, 2-front of S107, C157, C158, C159, for open connection or short. If voltage is incorrect at pin 6 of V108 check section 3-rear of S102 and R198, R200, and R201.

Note. TB117 is used only in bands 1, 2, 3, and 4. TB118 is used only in bands 5, 6, and 7.

114. Stage Gain Charts

a. The stage gain charts in *d* and *f* below list the average input voltages in microvolts that are required at each of the rf and if. stages of Radio Receiver R–395/PRD–1 to produce a signal output of 2 volts dc across second detector output resistor R157 when measured with the vtvm.

b. Use these charts as standards when troubleshooting to check the overall gain of the receiver and the gain of each rf or if. stage or group of stages. When the receiver output is low and the tubes are working satisfactorily as indicated by a tube checker or tube replacement, localize the defective stage by checking the signal-voltage level of each stage against the chart. Use either the signal substitution or signal tracing method of troubleshooting, or by measuring the individual stage gain.

c. When making the rf stage measurements (*d* below), set the controls on the receiver as indicated in paragraph 101*a*. The signal generator is

connected between ground and the signal grid (pin 6) of mixer V103, the control grid (pin 1) of second rf V102, control grid (pin 1) of first rf V101, and to one side of loop antenna jack J101. The vtvm is always left connected across R157, and the signal generator attenuator is adjusted to keep a constant ouput voltage across this resistor.

d. The chart below gives the required input voltage in microvolts, necessary for proper stage gain checks of the antenna and rf amplifier sections

Band	Frequency	Signal generator output (microvolts) when connected to—				Dc output* (volts)
		Antenna	Control grid (pin 1) of 1st rf amplifier V101	Control grid (pin 1) of 2d rf amplifier tube V102	Signal grid (pin 6) of mixer tube V103	
1	160 kc	0. 16	3	14	43	2
2	360 kc	. 1	2. 5	21	72	2
3	800 kc	. 26	4. 4	19	45	2
4	1.8 mc	. 43	3. 5	16	48	2
5	3.2 mc	. 25	2. 1	16	52	2
6	9 mc	. 80	2. 4	16	50	2
7	20 mc	1. 50	6. 5	27	70	2

* The dc output is the voltage indicated on the vtvm connected across R157.

e. When making if. stage measurements (*f* below) connect the signal generator between ground and the various tubes indicated in the table. For 455-kc am if. measurements, BAND SWITCH S107 should be on band 1. For 1,610-kc am if. measurements, BAND SWITCH S107 should be on band 2. For 455-kc fm if. measurements, BAND SWITCH S107 should be on band 7.

f. The following chart lists the required input voltages, in microvolts necessary for proper stage gain checks of the mixer and if. amplifier sections.

Stage	Signal generator frequency (kc)	Signal generator connected to	Signal generator output (microvolts)	Dc output (volts)
455-kc am if.	455	Signal grid (pin 6) of mixer tube (V103).	37	[a] 2
		Control grid (pin 6) of 1st if. amplifier tube (V109).	500	[a] 2
		Control grid (pin 6) of 2d if. amplifier tube (V110).	3, 600	[a] 2
1,610-kc am if.	1, 610	Signal grid (pin 6) of mixer tube (V103).	70	[a] 2
		Control grid (pin 6) of 1st if. amplifier tube (V105).	300	[a] 2
		Control grid (pin 6) of 2d if. amplifier tube (V106).	6, 300	[a] 2
		Control grid (pin 6) of 3d if. amplifier tube (V107).	110, 000	[a] 2
455-kc fm if.	455	Signal grid (pin 6) of mixer tube (V103).	190	[b] 2
		Control grid (pin 6) of 1st if. amplifier tube (V105).	660	[b] 2
		Control grid (pin 6) of 2d if. amplifier tube (V106).	10, 500	[b] 2
		Control grid (pin 6) of 3d if. amplifier tube (V107).	155, 000	[b] 2

[a] The dc output is the voltage indicated on the vtvm connected across R157.

[b] The dc output is the voltage indicated on the vtvm connected at the junction of R180 and R181.

Section VI. REPAIRS AT FIELD MAINTENANCE LEVEL

115. General Replacement of Parts Procedure

a. With the exception of the five subassemblies listed in paragraph 117*b*, all the components of Direction Finder Set AN/PRD–1 can be reached easily and, if found to be defective, easily removed and replaced with new parts. Follow the procedures in paragraphs 116 through 131 when repairing any of the units.

b. When replacing parts, follow the instructions in paragraph 95 and observe the precautions in paragraph 96. Pay particular attention to the *warning* note preceding paragraph 94. Paragraph 97 lists the various illustrations showing the location of all chassis, subassemblies, and parts.

116. Antennas AS–536/PRD–1 and AT–301/PRD–1

a. Antenna AS–536/PRD–1 (fig. 6) is of simple mechanical construction. If any one of the arms is damaged, replace it with a new one. Be sure all link fittings at the hinged portions of the antenna are in good mechanical condition and are tightly fitted when assembled. When connecting link fittings to the arms, be sure the spring washers are

properly positioned and clean to insure good electrical contact. The link fittings at the ends of the arms are silver soldered and pinned to the steel arms. If only the link fittings are replaced, be sure the pins are replaced and the silver soldering is done carefully.

b. When repairing the antenna assembly, check the two nylon bushings in the antenna support and be sure the center mast section (Antenna AT–301/PRD–1) is electrically insulated from the outer arm sections of Antenna AS–536/PRD–1.

c. Do not lubricate any parts of the antenna assembly.

d. When repairing the antenna assembly, refinish it as instructed in paragraph 128.

117. Radio Receiver R–395/PRD–1

a. General. All the parts of Radio Receiver R–395/PRD–1 and its cabinet (CY–946/PRD–1), except the subassemblies listed in *b* below, are easily removed and replaced by following the procedures and repair methods. Refer to the list of illustrations in paragraph 97 for the location of all parts.

b. Subassemblies. The subassemblies of the radio receiver and the receiver cabinet require detailed instructions for their removal, repair, and replacement. The table below lists the subassembly with paragraph reference for detailed instructions.

Paragraph No.	Subassembly
121	Azimuth disk.
122	Tuning mechanism.
123	Main tuning capacitor.
124	Linkage adjustments.
125	ANT. TRIMMER capacitor.

c. Cleaning Dial Window. When repairing the receiver, always clean the plastic (plexiglas) window behind the front panel. To do so, proceed as follows:

(1) Remove the two screws that hold the dial light bracket (A 142) on top of the receiver (fig. 77) and lift off the bracket.

(2) Remove the four screws that hold the plastic window and bezel to the front panel (fig. 21).

(3) Remove the window assembly by pulling it straight up from the back of the front panel.

(4) Clean the plastic window only with soap and water; use the bare hand to feel and dislodge any caked dirt or mud. A soft cloth, sponge, or chamois may be used only to apply water to the plastic window. Dry the window with a clean damp chamois. Do not rub the window with a dry cloth; this builds up an electrostatic charge on the plastic, which attracts dust particles from the air. The damp chamois removes the charge, as well as the dust. To remove oil and grease only, rub the window lightly with a cloth moistened with kerosene or hexane.

Caution: Do not use gasoline, alcohol, benzene, acetone, carbon tetrachloride, fire extinguisher fluid, lacquer thinners, or glass window cleaning sprays; these materials will soften the plastic and may cause cracks to appear.

d. Lubrication. When Radio Receiver R–395/PRD–1 is repaired, always check the tuning mechanism, its linkage, and the gear train assembly behind the front panel (fig. 77); lubricate them as instructed in paragraph 127*a*. Lubricate the receiver cabinet as instructed in paragraph 127*b*.

e. Refinishing. After repairing the receiver, inspect Electrical Equipment Cabinet CY–946/PRD–1 (fig. 9) which houses the receiver and if necessary refinish the cabinet as instructed in paragraph 128.

118. Dynamotor-Power Supply DY–79/PRD–1

a. No special instructions are necessary for replacing parts of Dynamotor-Power Supply DY–79/PRD–1. All the parts can be reached easily (figs. 63 and 64) and ordinary repair methods for electrical and electronic equipment are applicable to this unit.

b. When the dynamotor-power supply unit and its housing cabinet are repaired, be sure to lubricate both in accordance with instructions given in paragraph 127*c*.

c. After repairing Dynamotor-Power Supply DY–79/PRD–1, inspect the Electrical Equipment Cabinet CY–948/PRD–1 (fig. 18), which houses the dynamotor-power supply unit and if necessary refinish the cabinet as instructed in paragraph 128.

119. Battery Box CY–947/PRD–1

a. Battery Box CY–947/PRD–1 (figs. 12 and 19) needs no special repair instructions. Be sure the four U-shaped clamps inside the battery box hold the batteries firmly and tightly in place.

b. Check the gasket on the cover. If the gasket shows any signs of wear or damage, replace it with a new one. Be sure the cover fasteners are secure. To remove the cover, press down on each fastener with a screwdriver and rotate the fastener one-fourth turn *counterclockwise* to; attach the cover, press down on each fastener with a screwdriver and rotate the fastener one-fourth turn *clockwise.*

c. When repairing the battery box, lubricate the mounting plate on the underside as instructed in paragraph 127*d.*

d. After making repairs to the battery box refinish it, if necessary, as instructed in paragraph 128.

120. Minor Components

a. Direction Finder Tripod MT–870/PRD–1. The tripod (fig. 13) is easily disassembled and replacement parts are easily installed. When making repairs, lubricate the mounting screw and locking pins (one on each leg) as instructed in paragraph 127*e.* After repairing the tripod, refinish as instructed in paragraph 128.

b. Power and Test Cords. Power cords W1 and W2 and test cord W3 (fig. 23) should be inspected and checked when repairs are made to Direction Finder Set AN/PRD–1. If the cords or connectors are damaged, they should be replaced (pars. 16*c* and *d*).

c. Headset and Cord. If either the standard Navy type CW–49507 headset or Cord CD–307 (fig. 14) is damaged, replace it.

d. Compass. If the compass (fig. 15) is damaged, replace it with a new one.

Section VII. MECHANICAL REPLACEMENT AND ADJUSTMENT OF SUBASSEMBLIES

121. Azimuth Disk

(figs. 75, 76, and 85)

Note. The numbers in parentheses in *a* through *c* below refer to the item numbers in figure 85.

a. Disassembly. To disassemble the azimuth disk assembly, proceed as follows:

(1) Remove the azimuth disk assembly from the top of the receiver cabinet (fig. 20) by taking out the six hexagonal-head screws on the underside of the top of the cabinet.

(2) Remove locking antenna housing clamp (36).

(3) Remove the contact spring and jack assembly (J301) from the mounting flange.

(4) Remove the two $\frac{3}{16}$-inch thick ring nuts and washers (19 and 18) by using two flat wrenches, each of which has a thickness of one-eighth inch and a jaw opening of $1\frac{3}{4}$ inch.

(5) Insert a heavy screw driver or flat bars in each of the round holes A and B, figure 76, and *gently* force out the antenna support hub (5) and its attached locking disk (30) from the azimuth scale assembly. This will expose the ball bearings (3) and the two rubber O rings (4).

(6) To remove the antenna mount assembly from the azimuth disk, take out the eight screws and lockwashers (43 and 42) that attach the two assemblies together and lift up the antenna mount assembly. This will expose the three wired connections (1). *Do not cut these wires.*

(7) Remove the wires from the three terminal screws (2). This will free the antenna mount assembly and permit access to the three jamnuts and lockwashers (45 and 46) that hold the three antenna sockets (50), their nylon antenna socket insulations (49), and nylon insulating washers (47).

(8) To disassemble the contact ring assembly, remove the roundhead machine screw (26) and the three hexagonal nuts and lockwashers on the top of the terminal rod. The three antenna contact rings and insulators (21 and 22) can then be pulled apart.

(9) To remove the contact ring insulator stud (20), loosen the three set screws (15) on the side of the antenna mounting flange (55) and *gently* force out the stud.

(10) The further disassembly of the antenna mount assembly and the azimuth disk assembly require no detailed instructions.

b. Replacement of Parts. After the azimuth disk assembly has been disassembled, clean and inspect all parts and replace any defective or damaged ones. Pay particular attention to all insulators and insulating parts and check to be sure they are not defective.

c. Reassembly. To reassemble the azimuth disk assembly, follow the disassembly procedure in reverse order. Be sure to lubricate the parts referred to in (1) below and to adjust the fit of the ball bearings as instructed in (2) below. Rewire the assembly as instructed in (3) below.

(1) During reassembly, lubricate the three O-rings (4) and the two ball bearings (3). Use the lubricant specified in paragraph 127*b*.

(2) To rewire the three terminal screws (2) to the three antenna sockets (50) in correct position, refer to figure 85 and follow the procedure given by the insert drawing A. After completing the work, check to be sure all three antenna sockets (50) are correctly wired to the three antenna contact rings (21).

(3) To insure a free turning antenna mount assembly, the ball bearings (3) must be carefully adjusted. After installing the ball bearing tension washer (18) screw on the first ring nut (19) until it is hand-tight; then unscrew this ring nut approximately one-quarter of a turn. Hold this first ring nut in position with one of the flat wrenches (⅛-in. thick (*a*(4) above)) and turn the second ring nut (using the second ¼-in. flat wrench) tight against the first ring nut. Test the rotating movement of the antenna mount. If it is not free and does not turn easily, repeat the adjustment of the two ring nuts.

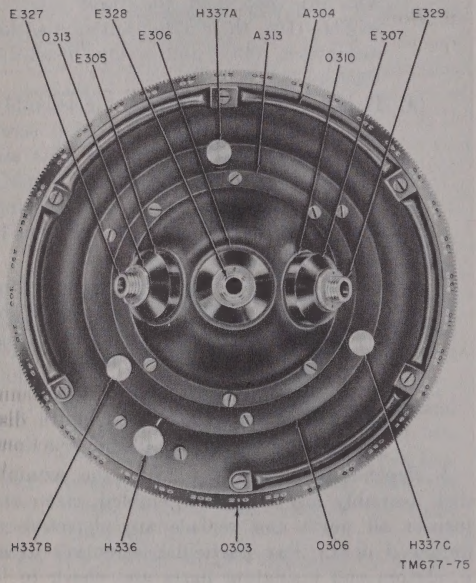

Figure 75. Azimuth disk and antenna mount, top view.

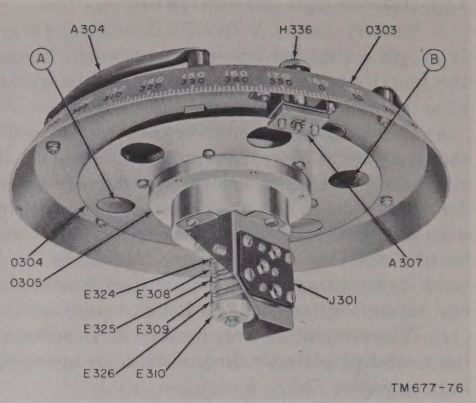

Figure 76. Azimuth disk and antenna mount, bottom view

122. Tuning Mechanism

a. Disassembly. To remove the tuning mechanism, proceed as follows:

(1) Remove the dial lock (O 179), the control knob (E151), logging dial ring, control knob (E150), logging dial scale (N102), and associated internal parts of the assembly. Mark each part and establish its position with relation to other parts so that the main tuning control can be reassembled correctly.

(2) Remove the following control knobs (fig. 28):

(*a*) AM-FM (E153).
(*b*) AUDIO VOLUME (E154).
(*c*) BFO-PITCH (E155).
(*d*) ANT. TRIMMER (E157).
(*e*) BAND SWITCH (E159).

(3) Loosen the set screw in the hub of the DIAL ADJ linkage and the two set screws in the hub of the function switch linkage (O 142).

(4) Remove the two screws on the top of the receiver that hold the dial light mounting bracket (A 142) and remove the bracket.

(5) Loosen the eight screws along the edges of the front panel (fig. 8) that hold the panel to the chassis. The panel can now be removed to expose the tuning mechanism assembly (fig. 77).

(6) Remove the center screw of the hub and bracket gear assembly (fig. 77), which consists of a gear staked on a bracket (O 170). Slip the assembly off the BAND SWITCH (S107) shaft to which is attached a spur gear (O 163).

(7) Remove the band shutter disk (O 161) and its spring washer.

(8) Remove the pointer indicator assembly (I 104) and its spring washer by removing the spring retaining rings.

(9) Take out the three flat-head screws holding dial scale (N101) and remove the scale. This will expose the gear train assembly, which consists of a set of five gears. The gear assembly is attached to the chassis by four hexagonal head screws. Remove the four screws and lift out the assembled unit. The gear train assembly requires no special instructions for disassembly.

b. Replacement of Parts. After the tuning mechanism is disassembled clean and inspect all parts and replace any that are defective or damaged. Be sure the marking and indications on dial scale (N101) are legible. Check all gears for tightness on shafts and see that the setscrews hold properly. See that backlash of gears is at a minimum; spring-loaded gears must be spread two teeth apart and then meshed.

c. Reassembly and Alinement of Band Shutter Assembly. To reassemble the tuning mechanism and aline the band shutter assembly, follow the steps in *a*(6) through (9) above in reverse order. The pinion gear on the tuning mechanism drives the large gear on the gang capacitor shaft. Be sure the large gear is under proper tension for minimum backlash and properly meshed with the pinion gear before tightening the four hexagonal head mounting screws; then proceed to aline the band shutter assembly as follows:

(1) Turn the dial scale (N101) *counterclockwise* to zero against the stop. The zero line on the dial scale should then be in line with an imaginary vertical center line running through the center of both shafts of the gear drive assembly. Any misalinement can be corrected by loosening the two set screws that hold the small drive gear to the drive shaft (O 178). Hold the shaft against the stop and turn the gear until the dial is at the proper zero setting and tighten the set screws again.

(2) Place the shutter disk (O 161) with the window slot of band 1 (100–225 kc) up, and set the center of the opening in line with the zero line on the dial scale.

(3) Turn the BAND SWITCH shaft fully *counterclockwise.*

(4) Replace the hub and bracket gear assembly (O 170) and slip the gears in mesh with the spur gear (O 163) on the BAND SWITCH shaft. Be sure to maintain the dial scale (N101) and shutter dial (O 161) in *exactly the same positions* as instructed in *c*(1) and (2) above. Also be sure to keep the BAND SWITCH shaft and its spur gear (O 163) in the full counterclockwise position.

(5) If a slight adjustment is necessary to center the shutter window opening over the indications of the dial scale, loosen the three screws on the spur gear (O 163) and turn the gear slightly on the hub until the correct alinement position is obtained.

d. Reassembly and Alinement of Main Tuning Capacitor. To reassemble and aline the tuning mechanism and the main tuning capacitor follow the steps in *c*(2) through (5) above in reverse order and then aline the TUNING dial (N101) and the main tuning capacitor as follows:

(1) Loosen the two set screws on the hub of the large spur gear fastened on the end of the shaft of the main tuning capacitor. (This gear is located inside the chassis assembly.)

(2) Turn the drive shaft (O 178) of the tuning mechanism fully *counterclockwise,* and hold it in this position for all adjustments in (3) and (4) below.

(3) Reassemble the dial lock (O 179), control knob (E151), dial logging control knob (E150), logging dial scale (N102), and all associated internal parts of the assembly making up the main tuning control (fig. 28). The friction drive shaft rides in an eccentric bearing bushing and by turning it the driving tension can be increased or decreased. To turn the

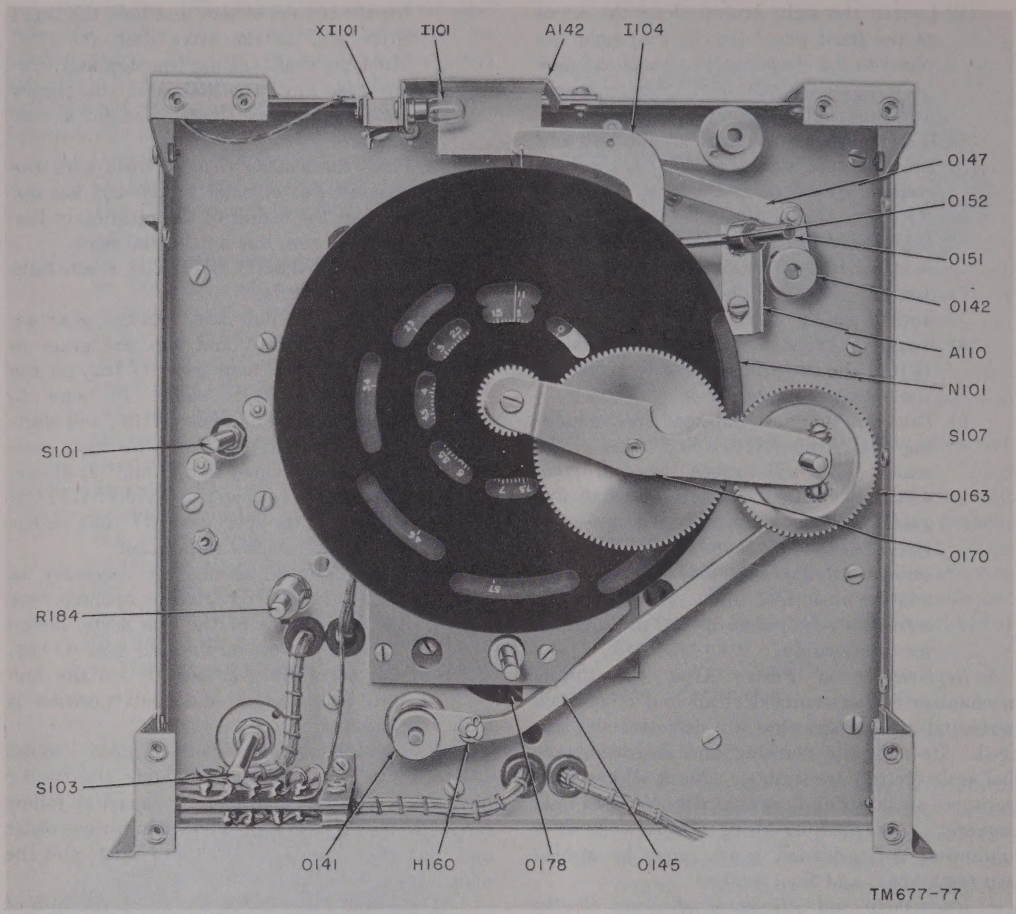

Figure 77. Radio Receiver R-395/PRD-1, view of gear train behind front panel.

bushing, loosen the nut on the back of the panel and turn the hexagonal head of the bearing bushing to the desired position, then tighten the nut. Be sure that the O mark of the logging dial (N102) coincides with the white line mark on the dial ring. Also be sure the O point of main TUNING dial (N101) is on the hairline in its center position. DIAL ADJ. pointer (E153) should be at the white line.

(4) Reach inside the set and grasp the flexible coupling between the two sections of the main tuning capacitor (fig. 56). Turn the flexible coupling until the main tuning capacitor is completely in mesh. Tighten the two set screws on the hub of the large spur gear ((1) above).

e. Final Adjustments. If all the adjustments have been carefully made as instructed in *c* and *d* above, the tuning mechanism of the receiver should be correctly alined against the counterclockwise stop of the tuning shaft. In this position both the main TUNING dial (N101) and the logging dial (N102) must line up together at the O mark of each dial. Further, if all adjustments have been properly made there should be no end stop by the rotary sections of the ganged main tuning capacitor. If end stop occurs, a slight spring back will show up at dial (N102);

it will then be necessary to repeat the alinement procedure in *d*(4) above.

123. Main Tuning Capacitor
(fig. 56)

a. Removal. To remove the main tuning capacitor (C150, C149, C152, C151, C154, C153, C156, and C155, Sig C stock No. 3D 9293), first remove the front panel and tuning mechanism as instructed in paragraph 122. Carefully unsolder all the leads from the capacitor assembly, then remove the assembly from the chassis by taking off the seven bolts.

b. Replacement. If the main tuning capacitor is defective, replace it with a new assembly.

124. Linkage Adjustments

a. BAND SWITCH S107 and S102. To adjust the linkage between BAND SWITCH S107 and BAND SWITCH S102 (fig. 77), proceed as follows:

(1) Loosen the two set screws on the hub (O 141) of BAND SWITCH S102.
(2) Turn BAND SWITCH S107 and BAND SWITCH S102 shafts fully *counterclockwise.*
(3) Tighten the two set screws on the hub (O 141) of BAND SWITCH S102.
(4) Check to see that both indexes coincide and the switch contacts line up at the center of their respective contact springs.

b. Function Switch. To adjust the linkage and lever knob assembly of function switch S108 (figs. 28 and 77), proceed as follows:

(1) Loosen the two set screws in the lever hub (O 142).
(2) Adjust the linkage so that the pointer of the switch knob (E158) is at DF when function switch S108 is in the DF position. Tighten the two set screws. Be sure that when the function switch is in the CAL position the link arm (O 147) rests on the stop angle (A110). Check to see that the spring returns the switch freely from red to DF, and from CAL to monitor position.

125. ANT. TRIMMER Capacitor

a. To remove ANT. TRIMMER capacitor C158, use the special Allen wrench (41–M425) shown in figure 29. Insert this wrench through the round hole in terminal board TB105 (fig. 52). The upper set screw holding the flexible shaft in the coupling capacitor can then be easily reached and loosened.

b. Loosen only the upper set screw and the two screws that hold the ANT. TRIMMER mounting angle to the underside of the chassis assembly; then remove the ANT. TRIMMER capacitor by pulling it out from the underside.

Section VIII. LUBRICATION AND REFINISHING

126. Disassembly for Lubrication

a. The subassemblies of Radio Receiver R–395/PRD–1 and the receiver cabinet that must be disassembled to lubricate them are listed below with the paragraph reference where disassembly procedure is outlined. Other parts of the receiver and its cabinet that require lubrication can be reached without disassembly.

Subassembly	Paragraph No.
Azimuth disk	*a*121
Tuning mechanism	*a*122
Linkage adjustments	124

b. The following components can be lubricated without special disassembly instructions:

(1) Dynamotor-Power Supply DY–79/PRD–1.
(2) Battery Box CY–947/PRD–1.
(3) Direction Finder Tripod MT–870/PRD–1.
(4) Direction Finder Set Support MT–1283/PRD–1.

127. Lubrication Instructions

a. Radio Receiver R–395/PRD–1. When repairing and reassembling the receiver, lubricate the following parts with Grease, Aircraft and Instruments grease (GL), specifications No. MIL–G–3278:

(1) Tuning mechanism gears (O 163 and O 170).

(2) Gear train assembly.
(3) Linkage of BAND SWITCH S107 and S102 (O 145, H160, and O 141).
(4) Bearing of FUNCTION switch S108.
(5) Bearing of BFO PITCH switch control S103.

b. Electrical Equipment Cabinet CY–946/PRD–1. When repairing this unit, lubricate the four mounting holes on the sides of the cabinet that engage with the holding screws of Direction Finder Set Support MT–1283/PRD–1 (fig. 24). Use only antiseize compound as per MIL–C–3278 specifications. Also lubricate the following parts of the azimuth disk (par. 121):

(1) Two O-rings (item 4, fig. 85). Use Dow Corning No. 4 compound and spread over and between O-rings. All other grease must be kept away from this area.
(2) Two ball bearings (item 3, fig. 85). Use grease specified in *a* above. Pack bearings between rings and wipe off any overflow.
(3) Threads of ring nuts (item 19, fig. 85). Use antiseize compound as specified in subparagraph *b* above.

c. Dynamotor-Power Supply DY–79/PRD–1. When repairing this unit, lubricate the mounting plate on the underside of the bottom of the dynamotor cabinet. This is the plate that is used to fasten the dynamotor-power supply cabinet to the tripod. Use only antiseize compound as specified in *b* above. Also lubricate the two ball bearings in the dynamotor (D1) unit and use only grease as specified in *a* above. To lubricate either bearing, proceed as follows:

(1) Remove end cover on dynamotor.
(2) Remove bearing retaining plate and apply just enough grease to cover the bearing. *Do not pack the bearing.* Be careful to keep grease out of the adjacent commutator.

d. Battery Box CY–947/PRD–1. When repairing the battery box, lubricate the mounting plate on the underside of the bottom of the box. This is the plate that is used to fasten the battery box to the tripod. Use only antiseize compound as specified in *b* above.

e. Direction Finder Tripod MT–870/PRD–1. When the tripod is being repaired, lubricate the attaching hand screw and the three locking pins (fig. 13). Use only antiseize compound as specified in *b* above.

f. Direction Finder Set Support MT–1283/PRD–1. When repairing this unit (fig. 24) lubricate the four receiver holding screws at the top of the support; also lubricate the lifting screw of the side leveling adjustment and the worm gears of the forward leveling adjustment. Use only antiseize compound as specified in *b* above.

128. Refinishing

a. When the finish on the cabinets of the receiver, dynamotor-power supply, or the battery box become scarred or damaged, rust and corrosion can be prevented by a paint touchup or refinishing job on the bared surfaces. The antenna and tripod and jeep mount may also require refinishing.

b. When a touchup or refinishing job is necessary, first clean the surface down to bare metal by using #000 sandpaper until a smooth bright finish is obtained. If the surface is rusted or corroded, clean it with cleaning compound and use sandpaper to complete the preparation for painting.

Caution: Do not use steel wool. Minute particles may enter the equipment and cause shorting of circuits.

c. When painting, use a small brush. The paint used will be authorized and consistent with existing regulations.

Section IX. DIRECTION FINDER SET SUPPORT MT–1283/PRD–1

129. Installation

(fig. 86)

a. The support is installed over the left rear fender well of a ¼-ton truck and secured in place by nuts and bolts inserted through ten $^{11}/_{32}$-inch diameter holes in the truck body. The holes are located and drilled as instructed in (1) through (6) below. Mounting hardware is supplied with each support and is tabulated on the installation drawing (fig. 86). Follow the listing in the table for the correct bolt length to use at each hole. No flat washer is used at C. The two extra washers furnished are for use at position G ((4) below). Flat washers are to be used under the nut and lock washer, on the outside of the truck at A, B, D, E, F, G, under the screw head, and on the inside of the truck at H, I, and K. To install the support, proceed as follows:

(1) Locate and drill the hole marked A (16⅝ inches from the inside rear wall of fender well and 2⅛ inches from the side wall).

(2) Place the support on top of the fender well and *temporarily* bolt it in place through hole A. Check to be sure that the support fits snugly along the corner of the fender well, then locate holes B, C, D, E, F, and G by using holes in the support as a guide.

(3) Remove the support and drill holes B, C, D, E, F, and G.

(4) Reinstall the support; use appropriate hardware and bolt it in place through drilled holes in the following order: A, B, D, E, F, and G. Leave hole C open at present. Use two extra washers to take up any play that may exist between the bottom brace and floor of the truck at hole G.

(5) Mount the reinforcing angle under the fender by bolting it in place through hole C. This bolt will clamp together the support, fender, and reinforcing angle.

(6) Drill holes H, I, and K through the reinforcing angle from the outside of the truck. Finish bolting the angle by using the appropriate hardware.

b. To mount Radio Receiver R–395/PRD–1 (with its attached dynamotor or battery box-power supply source) on Direction Finder Set Support MT–1283/PRD–1, first, retract the four receiver holding screws (fig. 86) into their bushings. Next, ease the receiver into support cradle, resting the side bars of the receiver cabinet on top of the bars on the support cradle. Push the holding screws into the threaded holes in the sides of the receiver cabinet and tighten them in position.

130. Disassembly and Repair

a. To disassemble Direction Finder Set Support MT–1283/PRD–1, first remove it from the vehicle on which it may be installed then follow the installation instructions in paragraph 129.

b. The exploded view of the mounting support shown in figure 87 is numbered in sequence for complete disassembly of the entire unit. If a part requires repair or replacement, begin with the lowest number associated around the part and continue until the part is free. Clean, repair, or replace it, then reinsert the part by reversing the numerical sequence. An example for disassembly of some specific items is found in *c* below.

c. When threaded studs 37, worm gears 29 (only one of each is shown in figure 87, both can be seen in figure 86), and driving worm gears 30 on the worm shaft need cleaning or replacing, proceed as follows:

(1) Remove the four supporting brackets (2 each, left-hand 13 and right-hand 14) by removing machine screws 7 (8 each), hexagonal nuts 8, and lock washers 9. This will free the supporting brackets from the cradle

(2) Remove side hinge bracket 23 by removing (2 each) machine screws 7, hexagonal nuts 8, and lock washers 9. Remove side hinge bracket 22 by removing machine screws 7, hexagonal nut 8, lock washer 9, machine screw 18, stop nut 19, and space washer 20. This will remove the entire worm gear assembly from the mount for thorough cleaning. If further disassembly is required for replacement of defective gears or bushings, proceed as follows:

(*a*) Remove machine screws 28 (3 each) and lock washers 9. This will separate upper dual pivot block 24 from lower positioning worm drive mounting bracket 34.

(*b*) To disassemble dual pivot block 24, remove both drive worm gears 29 (only 1 shown) by taking out set screws 33 and using a drift punch; take out the drive pins 35. To remove threaded studs 37 from pivot blocks 15, remove four stop nuts 19, six thrust washers 26, and two space washers 27. Remove two bearing bushings 25 from the dual pivot block and check for chip or wear. This completes the disassembly of the upper section of the worm assembly.

(*c*) To disassemble lower positioning worm drive mounting bracket 34, first use a drift punch to take out three drive pins 31 from the two driving worms on worm shaft 30 and thrust collar 32. Then loosen set screw 33 on thrust collar 32, and remove the worm drive shaft. When reassembling, be sure to

put thrust washers 26 in their proper place (fig. 87).

d. The method of disassembly in *c* above can be applied to any other part of the support. Be careful in reassembling and refer to figure 87 as a guide.

131. Assembly and Lubrication

a. To assemble Direction Finder Set Support MT–1283/PRD–1, refer to paragraph 130 and figure 87 for sectional assembly, and to paragraph 129 for initial assembly. Be sure that all parts are properly and tightly fitted together. Pay particular attention to the installation of all washers.

b. When assembling the support, lubricate the four holding screws, the lifting screws, and the worm gears as instructed in paragraph 127.

c. To install the support on a truck, follow the procedure in paragraph 129.

CHAPTER 7

ALINEMENT PROCEDURES

Section I. TEST EQUIPMENT USED FOR ALINEMENT

132. Standard Test Equipment

The following standard test equipment is used for alinement of Radio Receiver R–395/PRD–1. Either test meter (*c* and *d* below) may be used at the discretion of the operator.

a. Signal Source. A standard am generator with an output impedance of approximately 50 ohms. Am modulation when required will be 400 cycles, with 30 per cent modulation. Use RF Signal Generator Set AN/URM–25A (par. 98) or equivalent.

b. Electronic Multimeter. Use Electronic Multimeter TS–505/U (par. 98) or equal.

c. Multimeter. Use Multimeter TS–352/U, TS–297/U (par. 98) or equal.

d. Oscilloscope. Use Oscilloscope OS–8A/U (par. 98) when the alternate, visual alinement method in paragraph 137*b* is applied.

e. Crystal Calibrator. Frequency Meters AN/URM–79 and AN/URM–80 are used for calibrating purposes to set accurately the local oscillator (V104) or calibrate the signal generators. Frequency Meter AN/URM–79 is used for the lower frequencies and Frequency Meter AN/URM–80 for the higher frequencies (par. 98).

133. Standard Output Conditions

a. Output Condition No. 1. The VTVM (vacuum tube voltmeter) or multimeter described in paragraph 132*b* or *c* is connected to the receiver output jack. The standard signal-pulse-noise output level should be 1.3 volts.

b. Output Condition No. 2. The VTVM or multimeter described in paragraph 132*b* or *c* is connected across receiver diode load resistor R157. The standard signal-plus-noise output level should be 2 volts.

134. Standard Receiver Setup

a. The receiver should be removed from the receiver cabinet and placed on a work bench, the top of which has a copper or aluminum plate on which the signal generator and receiver can be placed and well grounded.

b. The receiver controls should be in the following positions:

(1) AM-FM switch S101 to AM or FM, depending on test conditions.
(2) BFO-PITCH control switch S103 to OFF.
(3) Function switch S108 to DF.
(4) Meter Switch S109 to IND.
(5) SENSITIVITY control R171 at maximum clockwise (but not AVC position).
(6) BAND SWITCH S107 set on desired band.
(7) Main tuning control set on desired frequency.
(8) AUDIO VOLUME control R184 varied, depending on test conditions.
(9) POWER switch S104 to ON.

Section II. ALINEMENT

135. 455-Kc Am If. Amplifiers

a. To aline the 455-kc am if. amplifiers (V109, V110) (par. 132, 133, 134), proceed as follows:

(1) Use the signal generator source (par. 98) with Test Lead CX–1363/U and set BAND SWITCH 107 to band 1.
(2) Connect the ground, or black, end of the test lead from the signal generator to a ground point near the mixer (V103) tube socket.
(3) Connect the signal, or red, end of the test lead to the signal grid (pin 6) of the mixer tube.
(4) Connect the VTVM across detector load resistor R157.
(5) Set the signal generator to 455-kc and adjust its attenuator to produce 1 to 3 volts of dc at the VTVM.

b. Proceed to aline the amplifiers as directed in (1) through (4) below. Tuning is done by

adjusting the slugs on the top and bottom of the if. cans. Keep reducing the output of the signal generator while the if. system is brought into tune to limit the dc output at R157 to 1 to 3 volts.

(1) Tune the primary and secondary of if. transformer T103 for maximum dc on the VTVM.

(2) Tune the primary and secondary of if. transformer T102 for maximum dc on the VTVM.

(3) Tune the primary and secondary of if. transformer T101 for maximum dc on the VTVM.

(4) Repeat the steps in (1), (2), and (3) above until transformers T103, T102, and T101 are peaked.

136. 1,610-kc Am If. Amplifiers

a. To aline the 1,610-kc am if. amplifiers (V105, V106, and V107), refer to paragraph 132, 133, 134, and proceed as follows:

(1) Set the BAND SWITCH S107 to band 2.

(2) Connections of the signal generator (par. 98) and VTVM are the same as in paragraph 135.

b. Aline the amplifiers as follows:

(1) Tune the primary and secondary of if. transformer T110 for maximum dc output on the VTVM.

(2) Tune the primary and secondary of if. transformer T108 for maximum dc output on the VTVM.

(3) Tune the primary and secondary of if. transformer T106 for maximum dc output on the VTVM.

(4) Tune the primary and secondary of if. transformer T104 for maximum dc output on the VTVM.

(5) Repeat the steps (1) through (4) above until transformers T110, T108, T106, and T104 are peaked.

137. 455-kc Fm If. Amplifiers

a. Alinement Using VTVM. To aline the 455-kc fm if. amplifiers with a VTVM (par. 132, 133, and 134), proceed as follows:

(1) Set BAND SWITCH S107 to band 7. Set Am-Fm switch S101 to FM.

(2) Connect a VTVM from ground to the junction of R181, R182, C256, and CR102 (fig. 41 or 60).

(3) Connect a 455-kc am signal (use the signal generator in paragraph 98), to pin 6 of V107. Set the signal generator for 100,000 microvolts with modulation off.

(4) Adjust the bottom tuning slug of T111 for zero dc output on the VTVM. An adjustment of the tuning slug in either direction will swing the meter needle positive or negative when zero reading is obtained, after the correct setting has been made. This adjustment sets the secondary of the discriminator to the center frequency.

(5) Connect the VTVM from ground to the junction of R179, R180, R181, C255, and C256.

(6) Tune the top slug of T111 for maximum reading on the VTVM.

(7) Place the generator signal ((3) above) on pin 6 of V106 and tune the primary and secondary of T109 to maximum on the VTVM.

(8) Place the signal on pin 6 of V105 and tune the primary and secondary of T107 to maximum on the VTVM. Gradually reduce the rf input of the generator as the number of if. stages increases.

(9) Place the signal on pin 6 of mixer V103 and tune the primary and secondary of T105 to maximum on the VTVM.

(10) After completing the alinement above, leave the signal on the mixer and take the VTVM off and place it back at the discriminator junction ((2) above). Retouch the bottom slug of T111 for zero on the VTVM.

b. Alinement Using Oscilloscope. As an alternate method, a visual alinement can be made by using an oscilloscope. This method of alinement requires an fm sweep signal generator that will supply a 455-kc intermediate frequency, with approximately 50-kc deviation and sweep rate of 50 to 60 cycles, an oscilloscope, and the detector circuit made up of components shown in figure 79.

(1) Connect the vertical amplifier of an oscilloscope through a shielded or coaxiacable to the junction of R181, R182, C256, and CR102. Calibrate the vertical oscilloscope gain so that 1 volt of signal produces a 2-inch deflection.

(2) Connect the horizontal amplifier of the oscilloscope to an external audio signal of 50 or 60 cycles for a proper response curve display.

(3) Insert a 455-kc fm signal from the generator to pin 6 of V107 and vary the output until the oscilloscope shows a 2-inch peak-to-peak display.

(4) Loosely couple a 455-kc unmodulated signal from an am signal generator to pin 6 of V107. This signal is used as a frequency marker and shows as a pip on the response curve. Adjust the frequency of this generator so that the marker will be first at the top peak, then at the bottom peak. Record the frequency for the marker positions. The response curve and frequency should conform to the curve shown in A figure 78. This completes the discriminator alinement.

(5) Disconnect the plate lead (pin 2) of V107 from the primary of T111 and connect the detector circuit to it (fig. 79). Connect the vertical input of the oscilloscope to the circuit. The detector circuit, not being frequency discriminating, will only show the response curve of T109, T107, and T105 in the steps in (6) through (10) below.

(6) Remove both signal sources from pin 6 of V107 and connect them to pin 6 of V106. Adjust the output of the fm generator for a 2-inch display of the response curve.

(7) Adjust the top slug (primary) of T109 to position the marker to the center of the response curve.

(8) To equalize the response curve peaks, adjust the bottom slug (secondary) of T109. Readjust the output of the fm sweep generator if necessary. Vary the frequency of the marker, am generator, so that it will be first at one peak then at the other. Record the frequency for the two marker positions. If necessary, retouch the primary and secondary so that the response curve and frequency conform to the one shown in B, figure 78. This completes the alinement for T109.

(9) Remove both signal sources from pin 6 of V106 and place them on pin 6 of V105; repeat the step in (8) above. Retune so the response curve conforms to that shown in C, figure 78. Because the signal goes through several tuned circuits, there is a slight increase in the bandwidth.

(10) To aline T105, remove both signal sources from pin 6 of V105 and place them on the mixer, pin 6 of V103, and repeat the step in (8) above. The response curve should conform to that shown in D, figure 78.

(11) Disconnect the crystal detector from the plate of V107 and reconnect the plate lead of V107 to the primary of T111.

(12) Connect the vertical input of the oscilloscope to the junction of R181, R182, C256, and CR102. The response curve should conform to that shown in E, figure 78. If the response curve is not symmetrical, slightly readjust either T109, T107, or T105.

138. Beat-Frequency Oscillator

For the bfo alinement procedures in *a* through *h* below. first refer to paragraphs 132, 133, and 134.

a. To aline the 455-kc beat-frequency oscillator (V113), proceed as follows:

(1) Set BAND SWITCH S107 to band 1 and AM-FM SWITCH S101 to AM.

(2) Turn on the bfo by turning BFO PITCH control S103 and set the knob pointer to O on the front panel.

(3) Connect signal generator (par. 98) to the control grid (pin 6) of the first 455-kc amplifier tube (V109) and set the signal generator to 455-kc. Adjust the signal attenuator for an output of 500 to 1,000 microvolts of unmodulated signal. Tune the signal generator for maximum dc voltage output across R157 by using the vtvm.

(4) Connect the headset to audio OUTPUT jack J103.

(5) Tune bfo coil L134 until a zero beat is heard in the headset. The final setting for the zero beat should be made with the lowest possible signal generator output. An oscilloscope across R157 or at any point in the audio amplifier can also be used to detect the zero beat.

(6) Vary the BFO PITCH control to either side of zero and listen for a variable tone as this control is moved.

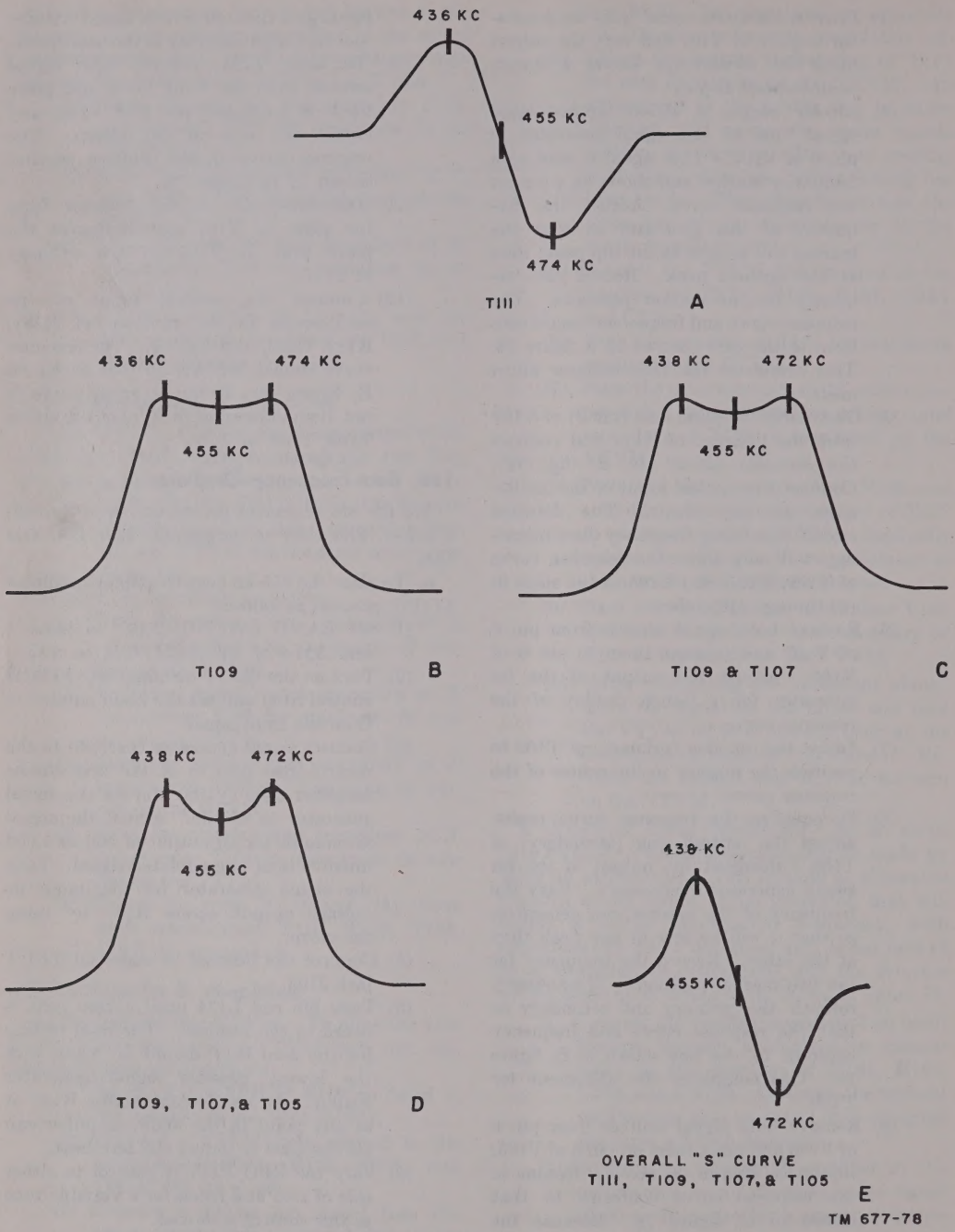

Figure 78. Alinement curves for the 455-kc fm if. transformers.

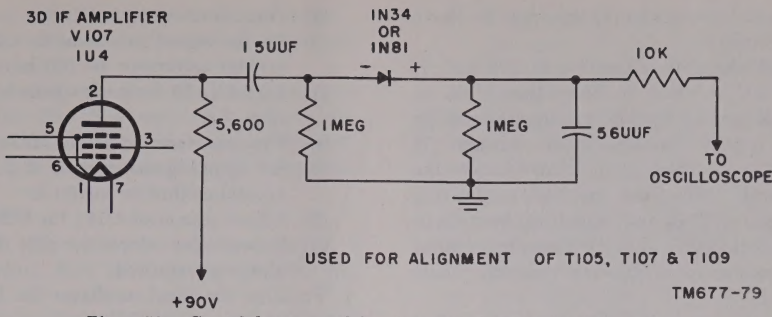

Figure 79. Crystal detector used for alinement of 455-kc fm if. transformers.

b. To aline the 1,610-kc beat-frequency oscillator (V113), proceed as follows:

(1) Set BAND SWITCH S107 to band 2.

(2) Turn BFO PITCH control S103 on and set pointer to zero on the front panel.

(3) Connect signal generator to the control grid (pin 6) of 1,610-kc first if. amplifier tube V105. Set the signal generator to 1.610-kc. Adjust the attenuator for an output of 300 to 500 microvolts of unmodulated signal. Tune the signal generator for maximum dc voltage output across R157 by using the vtvm.

(4) Connect the headset to audio OUTPUT jack J103.

(5) Tune bfo coil L135 until a zero beat is heard in the headset. The final setting for the zero beat should be made with the lowest possible signal source output. An oscilloscope across R157 or any other grid or plate in the audio amplifier can also be used to detect the zero beat.

(6) Vary the BFO PITCH control to either side of zero. A tone of variable pitch should be heard as this control is moved.

139. Local Oscillator

a. To aline the local oscillator (V104), proceed as follows:

(1) Set BFO PITCH control S103 to zero. Be sure the if. transformers are alined and that the bfo frequency is correct (455-kc for alinement of the osillator on bands 1, 3, 4, 5, 6, and 7 and 1,610-kc for alinement of the oscillator on band 2).

(2) Connect the signal generator by using the test cable to the control grid (pin 6) of the mixer tube (V103). Set signal attenuator to approximately 1,000 to 10,000 microvolts and keep reducing the signal as a zero beat is approached during oscillator alinement.

(3) For the detection of zero beat, connect the headset to audio OUTPUT jack J103 and adjust AUDIO VOLUME control R184 to a comfortable listening level.

(4) Rotate the main tuning control completely *counterclockwise* (gang tuning capacitor completely engaged) and set the DIAL ADJ. control so that it is in the center of the white line on the TUNING dial. This adjustment is the same for all bands and once set requires no further movement unless it is accidentally knocked out of position.

(5) The signal generator frequencies, to which the receiver local oscillator is to be tuned, must be known accurately. They must be calibrated against the crystal calibrator (par. 132*f*). Greatest alinement accuracy is obtained by using the smallest possible signal generator output.

b. To aline the local oscillator for band 1 (100 kc–225 kc), proceed as follows:

(1) Set BAND SWITCH S107 to band 1.

(2) Rotate the main tuning control so that 100 kc on the frequency dial is under the frequency indicating hairline of the DIAL ADJ. control.

(3) Set the signal generator or crystal calibrator to 100 kc.

(4) Adjust L128 for a zero beat by tuning its slug.

(5) Tune the receiver to 200 kc.

(6) Set the signal generator to 200 kc, or the crystal calibrator to 100 kc.

(7) Adjust capacitor C147 for a zero beat.

(8) Repeat the steps in (2) through (7) above as required.

(9) Check the dial calibration at 150 kc. If the dial accuracy is off, readjust C146 by either increasing or decreasing its capacity and repeat the steps in (2) through (7) above. In *c* through *h* below, it may take several trials of varying calibrating capacitor C146 and repeating the steps in (2) through (7) above before the required dial accuracy is obtained over the whole band.

c. To aline the local oscillator for band 2 (200 kc–520 kc), proceed as follows:

(1) Set BAND SWITCH S107 to band 2.
(2) Tune the receiver to 250 kc.
(3) Set the signal generator or crystal calibrator to 250 kc.
(4) Adjust L124 for a zero beat by tuning its slug.
(5) Tune the receiver to 500 kc.
(6) Set the signal generator to 500 kc or the crystal calibrator to 250 kc.
(7) Adjust capacitor C136 for a zero beat.
(8) Repeat the steps in (2) through (7) above as required.
(9) Check the dial calibration at 350 kc. If the dial accuracy is off, readjust C135 by either increasing or decreasing its capacity, and repeat the steps in (2) through (7) above.

d. To aline the local oscillator for band 3 (500 kc–1,200 kc), proceed as follows:

(1) Set BAND SWITCH S107 to band 3.
(2) Tune the receiver to 600 kc.
(3) Set the signal generator to 600 kc or crystal calibrator to 100 kc.
(4) Adjust L120 for a zero beat by tuning its slug.
(5) Tune the receiver to 1,100 kc.
(6) Set the signal generator to 1,100 kc or crystal calibrator to 100 kc.
(7) Adjust capacitor C126 for a zero beat.
(8) Repeat the steps in (2) through (7) above as required.
(9) Check the dial calibrator at 800 kc. If the dial accuracy is off, readjust C125 by either increasing or decreasing its capacity, and repeat the steps in (2) through (7) above.

e. To aline the local oscillator for band 4 (1.14 mc–2.6 mc), proceed as follows:

(1) Set BAND SWITCH S107 to band 4.
(2) Tune the receiver to 1.2 mc.
(3) Set the signal generator to 1.2 mc or the crystal calibrator to 100 kc.
(4) Adjust L116 for a zero beat by tuning its slug.
(5) Tune the receiver to 2.5 mc.
(6) Set signal generator to 2.5 mc or the crystal calibrator to 100 kc.
(7) Adjust capacitor C117 for a zero beat.
(8) Repeat the steps in (2) through (7) above as required.

f. To aline the local oscillator for band 5 (2.5 mc–5.8 mc), proceed as follows:

(1) Set BAND SWITCH S107 to band 5.
(2) Tune the receiver to 2.7 mc.
(3) Set the signal generator to 2.7 mc or the crystal calibrator set to 100 kc.
(4) Adjust L112 for a zero beat by tuning its slug.
(5) Tune the receiver to 5.5 mc.
(6) Set the signal generator to 5.5 mc or the crystal calibrator to 100 kc.
(7) Adjust capacitor C112 for a zero beat.
(8) Repeat the steps in (2) through (7) above as required.

g. To aline the local oscillator for band 6 (5.5 mc–13 mc), proceed as follows:

(1) Set BAND SWITCH S107 to band 6.
(2) Tune the receiver to 6 mc.
(3) Set the signal generator to 6 mc or crystal calibrator to 1 megacycle.
(4) Adjust L108 for a zero beat by tuning its slug.
(5) Tune the receiver to 12 mc.
(6) Set the signal generator to 12 mc.
(7) Adjust capacitor C108 for a zero beat.
(8) Repeat the steps in (2) through (7) above as required.

Caution: Be sure the oscillator is set at the dial frequency and not on the image frequency. The image frequency is 910 kc higher than the dial frequency.

h. To aline the local oscillator for band 7 (12.5 mc to 30 mc), proceed as follows:

(1) Set BAND SWITCH S107 to band 7.
(2) Tune the receiver to 13 mc.
(3) Set the signal generator to 13 mc or the crystal calibrator to 1 mc.
(4) Adjust L104 for a zero beat by tuning its slug.
(5) Tune the receiver to 29 mc.
(6) Set the signal generator to 29 mc or the crystal calibrator to 1 mc.

(7) Adjust capacitor C105 for a zero beat.
(8) Repeat the steps in (2) through (7) above as required.

Caution: Be sure the oscillator is set at the dial frequency and not on the image frequency. The image frequency is 910 kc higher than the dial frequency.

140. Rf Stages

For the rf stage alinement procedures in *a* through *h* below, first refer to paragraphs 132, 133, and 134.

a. To aline the rf stages (V101 and V102), proceed as follows:
(1) Turn BFO PITCH control S103 to OFF.
(2) Connect the signal generator by using the test cable, to the control grid (pin 1) of the first rf amplifier tube (V101) and adjust signal source attenuator for an output of 10 to 100 microvolts.
(3) Connect the vtvm across R157. As the rf stages are brought into alinement keep attenuating the output of the signal generator, so that final alinement takes place with a voltage output across R157 of 2 to 3 volts dc.
(4) Both the first and second rf stages (V101 and V102) are alined at the same time.

b. To aline the rf stages for band 1 (100 kc to 225 kc), proceed as follows:
(1) Set BAND SWITCH S107 to band 1.
(2) Tune the receiver to 110 kc.
(3) Set the signal generator to 110 kc.
(4) Adjust the L126 and L127 tuning slugs for maximum output on the vtvm.
(5) Tune the receiver to 200 kc.
(6) Set the signal generator to 200 kc.
(7) Adjust capacitors C140 and C142 for maximum output on the vtvm.
(8) Repeat the steps in (2) through (7) above as required until no increase in output appears across R157 as the coil and capacitor adjustments are varied.

c. To aline the rf stages for band 2 (220 kc to 520 kc), proceed as follows:
(1) Set BAND SWITCH S107 to band 2.
(2) Tune the receiver to 250 kc.
(3) Set the signal generator to 250 kc.
(4) Adjust the L122 and L123 tuning slugs for maximum output on the vtvm.
(5) Tune the receiver to 500 kc.
(6) Set signal generator to 500 kc.
(7) Adjust capacitors C129 and C132 for maximum output on the vtvm.
(8) Repeat the steps in (2) through (7) above as required.

d. To aline the rf stages for band 3 (500 kc to 1,200 kc), proceed as follows:
(1) Set BAND SWITCH S107 to band 3.
(2) Tune the receiver to 530 kc.
(3) Set the signal generator to 530 kc.
(4) Adjust the L118 and L119 tuning slugs for maximum output on the vtvm.
(5) Tune the receiver to 1,150 kc.
(6) Set the signal generator to 1,150 kc.
(7) Adjust capacitors C119 and C122 for maximum output on the vtvm.
(8) Repeat the steps in (2) through (7) above as required.

e. To aline the rf stages for band 4 (1.14 mc–2.6 mc), proceed as follows:
(1) Set BAND SWITCH S107 to band 4.
(2) Tune the receiver to 1.25 mc.
(3) Set the signal generator to 1.25 mc.
(4) Adjust the L114 and L115 tuning slugs for maximum output on the vtvm.
(5) Tune the receiver to 2.4 mc.
(6) Set the signal generator to 2.4 mc.
(7) Adjust capacitors C113 and C114 for maximum output on the vtvm.
(8) Repeat the steps in (2) through (7) above as required.

f. To aline the rf stages for band 5 (2.5 mc–5.8 mc), proceed as follows:
(1) Set BAND SWITCH S107 to band 5.
(2) Tune the receiver to 2.7 mc.
(3) Set the signal generator to 2.7 mc.
(4) Adjust the L110 and L111 tuning slugs for maximum output on the vtvm.
(5) Tune the receiver to 5.3 mc.
(6) Set the signal generator to 5.3 mc.
(7) Adjust capacitors C109 and C110 for maximum output on the vtvm.
(8) Repeat the steps in (2) through (7) above as required.

g. To aline the rf stages for band 6 (5.5 mc–13 mc), proceed as follows:
(1) Set BAND SWITCH S107 to band 6.
(2) Tune the receiver to 6 mc.
(3) Set the signal generator to 6 mc.
(4) Adjust the L106 and L107 tuning slugs for maximum output on the vtvm.
(5) Tune the receiver to 12 mc.
(6) Set the signal generator to 12 mc.

(7) Adjust capacitors C106 and C107 for maximum output on the vtvm.
(8) Repeat the steps in (2) through (7) above as required.

h. To aline the rf stages for band 7 (12.5 mc–30 mc), proceed as follows:
(1) Set BAND SWITCH S107 to band 7.
(2) Tune the receiver to 13 mc.
(3) Set the signal generator to 13 mc.
(4) Adjust the L102 and L103 tuning slugs for maximum output on the vtvm.
(5) Tune the receiver to 29 mc.
(6) Set the signal generator to 29 mc.
(7) Adjust capacitor C101 and C102 for maximum output on the vtvm.
(8) Repeat the steps in (2) through (7) above as required until no increase in output appears across R157 as the coil and capacitor adjustments are varied.

141. Antenna Stage

The preliminary antenna stage alinement procedure in *b* below is made to permit sensitivity and selectivity measurements of the receiver while it is still out of the cabinet. Aline final antenna stage in the screen room under a transmission line with the receiver in the cabinet and the loop antenna in place on top of the receiver cabinet. The final alinement procedure is given in *c* below.

a. To aline the antenna stage with the receiver out of its cabinet, refer to paragraphs 132, 133, 134, and proceed as follows:
(1) Connect signal source No. 1 (par. 147*a*) between one of the loop antenna terminals and a near-by ground point. Adjust signal source attenuator for an output of 5 to 20 microvolts.
(2) Connect the vtvm across R157 (fig. 84). As the antenna stage is brought into alinement, keep reducing the output of the signal generator so that final alinement takes place with a voltage output across R157 of 2 to 3 volts dc.
(3) Check to see that the ANT. TRIMMER knob is placed correctly on the antenna trimmer capacitor shaft. The knob pointer should indicate 9 o'clock when the capacitor is fully meshed (max. capacity) and it should indicate 3 o'clock when the capacitor is completely unmeshed (min. capacity).
(4) For alinement purposes, set the ANT. TRIMMER knob pointer to the position corresponding to the 10 o'clock reading on a clock.
(5) Adjust the antenna coils by setting the signal generator and tuning the receiver at the low end of each band. Adjust each coil for maximum reading on the vtvm. Adjustment points on each band should be as follows:

Band	Coil	Adjusted at—
1	L125	110 kc.
2	L121	240 kc.
3	L117	530 kc.
4	L113	1.25 mc.
5	L109	2.7 mc.
6	L105	6 mc.
7	L101	13 mc.

b. To make the final alinement of the antenna stage with the receiver in its cabinet, refer to paragraphs 145 through 149, and proceed as follows:
(1) Use signal source No. 2 (par. 147*a*), output condition No. 1 (par. 147*b*), and standard receiver setup (par. 148).
(2) Rotate the loop antenna to place it in the plane of the transmission line.
(3) Set ANT. TRIMMER knob pointer to 10 o'clock.
(4) Adjust the antenna coils by setting signal source No. 2 and tuning the receiver at the low end of each band. Adjust each coil for maximum reading on the output meter. Adjustments on each band should be the same as those given above in 141*a*(5).
(5) After each antenna adjustment at the low end, tune the receiver and signal source No. 2 to within 5 percent of the high end of each band. The antenna pointer should now peak at two points when the knob is rotated 360°.

142. Loop Balancing Adjustment

a. The loop antenna is coupled to the first rf amplifier stage through antenna coils. These coils permit mechanical adjustment of the position of the secondary winding in relation to the primary winding. The adjustment is done by using antenna coil alinement tool 41M421 (fig. 29). By adjusting the relative position of the secondary winding in relation to the primary it is possible to balance the

antenna circuit accurately. A preliminary balance can be performed at the center frequency while the receiver is on the bench, out of its cabinet, by using the dummy antenna connections shown in A and B, figure 80. Perform the final balance in a screen room under a transmission line as described in paragraphs 147*a*(2) and 161.

b. For preliminary balance, connect signal source No. 1 and dummy antenna first as shown in A, figure 80 and then as shown in B. The receiver must be set up under the standard receiver conditions described in paragraph 134; then proceed as follows:

(1) With signal source No. 1 connected as shown in A, figure 80 set signal generator to the desired test frequency and tune the receiver to this frequency. With BFO PITCH control S103 in the OFF position and receiver SENSITIVITY control R171 and AUDIO VOLUME R184 in any convenient position below the point of receiver overload, adjust signal source No. 1 output to produce 1.3 volts of receiver output. The signal-plus-noise to noise ratio can be of any convenient ratio as long as the signal is substantially above the noise level. Read the signal source No. 1 attenuator setting.

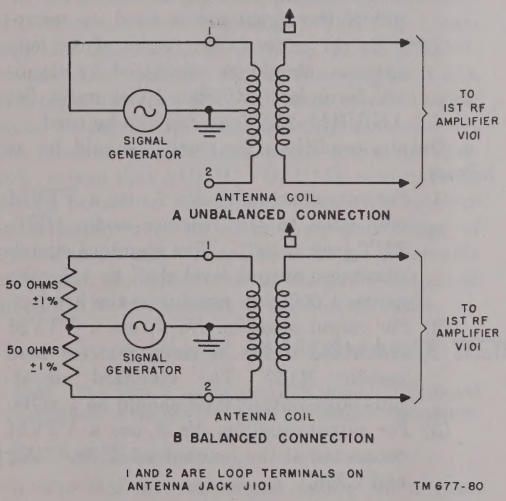

Figure 80. Dummy antenna connections for preliminary antenna coil balance.

(2) With the signal source No. 1 and dummy antenna resistors connected as shown in B, figure 80, without changing any of the receiver controls, increase the signal generator output until 1.3 volts of receiver output is again obtained. Adjust the balance of the antenna coil for minimum power output and keep increasing the signal generator output to keep the receiver power output at 1.3 volts. The balance point is the adjustment at which no further reduction in power output occurs. The signal generator attenuator output at this point divided by the signal generator output obtained in the unbalanced connection is the balance ratio. This test should be performed on all bands. Refer to paragraph 161 for balance ratio values.

143. Crystal Calibrator Adjustment

a. The crystal calibrator oscillator (V112) is a crystal-controlled Pierce oscillator that uses three different crystals. On bands 1, 2, and 3, a 100-kc crystal (Y103) is used; on bands 4 and 5, a 1.3-mc crystal (Y102) is used; and on bands 6 and 7, a 4-mc crystal (Y101) is used. There are no adjustments on the 1.3-mc and 4-mc crystals.

b. The only adjustment made is on the 100-kc crystal to prevent its oscillating at any other frequency than 100 kc. Set BAND SWITCH S107 to band 3 and the TUNING dial to 1,000 kc. Adjust the tuning slug of L141 to give maximum meter (M101) reading.

144. Meter Adjustment

a. The METER ADJ. potentiometer (R194) has a screwdriver slotted shaft that is accessible from the front panel.

b. To adjust the METER ADJ. potentiometer, proceed as follows:

(1) Set meter switch S109 in the IND position.

(2) Rotate SENSITIVITY control R171 to its extreme *counterclockwise* position.

(3) Now adjust METER ADJ. control to zero the needle of meter M101.

Note. Through use, the zero setting will drift as battery voltages decrease.

CHAPTER 8

FINAL TESTING

Section I. GENERAL PROCEDURE

145. Purpose and Procedure

a. Purpose. Following the replacement of any component of Direction Finder Set AN/PRD–1, (pars. 118–131), and the alinement of the units, (pars. 132–144), the repaired and alined unit should be final tested. Do this to be sure the repaired equipment functions correctly and gives the degree of accuracy of measurement necessary when in use.

b. Procedure. The procedure for testing each of the five major units namely, Battery Box CY–947/PRD–1, Dynamotor-Power Supply DY–79/PRD–1, Radio Receiver R–395/PRD–1, Antenna AS–536/PRD–1, and Antenna AT–301/PRD–1 is given in the paragraphs which follow.

146. Standard Test Conditions

When equipment is final tested, do so under the following standard conditions:

a. The test temperature and humidity should be within 70° F. and 50 to 70 percent relative humidity.

b. Test voltages must be those given in paragraph 151.

c. Audio power output must measure 1.3 volts across a 600-ohm load.

d. Standard am amplitude modulation must be 30 percent at 400 cycles per second.

e. The receiver voltages should be obtained from a battery box with new batteries, particularly for measurements under the transmission line in the screen room.

147. Equipment Required

a. The following signal sources are required for testing:

(1) *For signal source No. 1,* use a standard am signal generator with a 50-ohm output impedance connected directly to ground and to one of the loop input terminals of the receiver with the loop removed. Amplitude modulation, when required, should be 400 cycles, 30 percent modulation. Use RF Signal Generator AN/URM–25A (par. 98).

(2) *For signal source No. 2,* use a standard am signal generator with 50-ohm output impedance ((1) above) connected to an open-wire transmission line properly terminated and matched to the signal generator. Amplitude modulation, when required, should be 400 cycles, 30 percent modulation. The transmission line should be symmetrically located in the lateral dimension of the screen room (fig. 81). Direction Finder Set AN/PRD–1, complete with loop and sense antenna, should be located directly under the transmission line at approximately the center of the room and as far beneath the line as space will permit. The constant to convert microvolts output of the signal source used, to microvolts per meter at the center of the loop antenna, should be calculated by standard formulas. Rf Signal Generator Set AN/URM–25A (par. 98) can be used.

b. Output conditions for testing should be as follows:

(1) *For output condition No. 1,* use a VTVM connected to the receiver audio OUTPUT jack (J103). The standard signal-plus-noise output level shall be 1.3 volts across a 600 ohm resistor or the headset.

(2) *For output condition No. 2,* use a VTVM connected across receiver detector load resistor R157. The standard signal-plus-noise output level should be 2 volts.

(3) *For output condition No. 3,* use a VTVM connected at the junction of R179, C255, and C256.

148. Standard Receiver Setup

When making tests the standard receiver setup shall be as follows.

a. AM-FM switch S101 to AM.

b. BFO PITCH control S103 to OFF.

c. Function switch S108 to DF.

d. Meter switch S109 to IND.

e. SENSITIVITY control R171 at maximum clockwise (but not in AVC position).

f. BAND SWITCH S107 set on the desired band.

g. Frequency TUNING dial set on the desired frequency.

h. AUDIO VOLUME control R184 varied to meet test conditions.

i. Power switch S104 to ON.

149. Standard Test Frequencies

When tests are performed on the various bands, they should be performed at the frequencies shown in the chart below.

Band	Low frequency	Center frequency	High frequency
1	110 kc	160 kc	200 kc.
2	240 kc	360 kc	480 kc.
3	530 kc	800 kc	1,150 kc.
4	1.25 mc	1.8 mc	2.4 mc.
5	2.7 mc	4 mc	5.3 mc.
6	6 mc	9 mc	12 mc.
7	13 mc	20 mc	29 mc.

Section II. POWER SUPPLY PERFORMANCE TESTS

150. Battery Box CY–947/PRD–1

a. Check all output voltages as specified in paragraph 93. Check all battery plugs, and the output jack, to be sure they make tight electrical connections. See that all wiring is in good condition.

b. Check the gasket on the cover of the battery box and be sure all 16 fasteners hold the cover securely in place (par. 119*b*).

151. Dynamotor-Power Supply DY–79/PRD–1

a. To check the noise suppression performance of Dynamotor-Power Supply DY–79/PRD–1, connect the unit to Radio Receiver R–395/PRD–1, housed in its cabinet. Set up the equipment in a screen room so that there will be no external signal input voltage. Operate the equipment and set the receiver for standard setup operation (par. 148), except that AUDIO VOLUME control R184 should be set to maximum. Tune the receiver continuously over its entire frequency range of 100 kc to 30 mc. There must be no detectable noise from the dynamotor in the audio output as indicated by the headset or the output meter.

b. To check the regulation of Dynamotor-Power Supply DY–79/PRD–1, remove Radio Receiver R–395/PRD–1 from its cabinet and connect it to the dynamotor-power supply with test cord W3 (fig. 23). Operate the dynamotor-power supply unit from a dc voltage source of 20 to 32 volts. On the receiver, set the controls as follows:

(1) POWER switch S104 to ON.

(2) BFO PITCH control S103 to ON.

(3) Function switch S108 to MONITOR.

c. Adjust the input voltage successively to 21, 26, and 30 volts. The variations at each of these voltages should not exceed the following limits:

(1) 1.3 volt filament voltage 1.1 to 1.5 volts.
(2) +6 volt heater voltage 5.4 to 6.6 volts.
(3) 87 volt plate supply voltage 84 to 90 volts.

d. Repeat this test with the receiver load reduced to one 6AK5W tube and four 1U4 tubes or the equivalent static load. The variations should not exceed the following limits:

(1) +1.3 volts 1 to 1.6 volts.
(2) +6 volts 4.8 to 8 volts.
(3) +87 volts 80 to 100 volts.

Section III. PERFORMANCE TESTS WITHOUT LOOP ANTENNA

Note. The tests in paragraphs 152 through 159 should be performed on the receiver when it is outside the cabinet.

152. Am Sensitivity

a. For this test, use signal source No. 1 (par. 147*a*), output condition No. 1 (par. 147*b*), and standard receiver setup (par. 148). Tune the signal generator with modulation to the test frequency. Tune the receiver, main TUNING dial, and the ANT. TRIMMER to signal frequency.

b. With BFO PITCH control S103 to OFF and SENSITIVITY control R171 fully clockwise, adjust the signal generator attenuator to produce a 1.3-volt output. Turn off the signal generator modulation and adjust AUDIO VOLUME control R184 to produce .55 volt of noise output.

c. Continue to readjust signal source No. 1 output with modulation on, and AUDIO VOLUME control R184 with modulation off, until the out-

put with modulation is 1.3 volts, and the output without modulation is 1.5 volts. When this condition is reached, read the signal generator output. This reading is the receiver am sensitivity.

d. Repeat this measurement at the low-, middle-, and high-frequency points of each receiver band. The am sensitivity of the receiver should be below .6 microvolt at any point on any band.

153. Fm Sensitivity

a. For this test, use signal source No. 1 (par. 147*a*), output condition No. 1 (par. 147*b*), and standard receiver setup (par. 148), except that AM-FM switch S101 should be in the FM position and the BAND SWITCH S107 should be on band 7. Tune the signal generator with modulation to the test frequency. Tune the receiver, main TUNING dial, and the ANT. TRIMMER to the signal generator frequency.

b. With BFO PITCH control S103 to OFF and SENSITIVITY control R171 in the maximum position, adjust the signal generator to produce 1.3 volts of receiver output. Turn off the signal generator modulation and adjust the receiver AUDIO VOLUME control R184 to read .55 volt of noise output.

c. Continue to readjust the signal generator output with modulation on and the receiver AUDIO VOLUME control R184 with the modulation off, until the output with modulation is 3 volts, and the output without modulation is .55 volts. When this condition is reached, read the signal generator output. This reading is the receiver fm sensitivity.

d. Measurements shall be made at the low- and high-frequency points of band 7 only. The limits shall be 4 microvolts.

154. Over-All Selectivity

a. For this test use signal source No. 1 (par. 147*a*), the output condition No. 2 (par. 147*b*), and the standard receiver setup (par. 148). Set the signal generator, modulation off, to the test frequency. Tune the receiver, main TUNING control, and ANT. TRIMMER to the signal generator frequency. Adjust the signal generator output to produce a 2-volt deflection on the vtvm. Double the signal source output and detune signal source No. 1 to each side of the receiver frequency until a 2-volt deflection is again obtained on the VTVM. Read signal source No. 1 frequency at these two conditions. The difference between the two frequencies is the selectivity at the two-times-down point.

b. Repeat the measurements for signal source No. 1 outputs of 10, 100, 1,000, and 10,000 times the output at receiver resonance to obtain selectivity at 10-, 100-, 1,000-, and 10,000-times-down points. The signal generator frequency at each position may be determined by any convenient method that results in a measuring accuracy of .5 kc.

c. The selectivity test should be performed at 360 kc on band 2 and at 1.8 mc on band 4, with AM-FM switch S101 in the AM position. A selectivity test should also be performed at 20 mc on band 7 with the AM-FM switch in the FM position, using output condition No. 3 (par. 147*b*). These test limits should be as follows:

Frequency	Times down				
	2X	10X	100X	1,000X	10,000X
360 kc	5 kc ± 20%	8.5 kc ± 20%	12.5 kc ± 20%	16 kc ± 25%	20 kc ± 30%.
1.8 mc	3 kc	5.5 kc	7.5 kc	9.5 kc	11 kc.
20 mc	27 kc	45 kc	55 kc	75 kc	95 kc.

X indicates "times."

155. Image and If. Rejection Ratio

a. For this test, use signal source No. 1 (par. 147*a*), output condition No. 2 (par. 147*b*), and standard receiver setup (par. 148). Tune signal generator, without modulation, to the test frequency. Tune the receiver, main tuning control, and ANT. TRIMMER to the signal generator frequency. Adjust the signal generator output to produce a 2-volt deflection on the vtvm. Read signal generator output (first reading).

b. Without changing any of the receiver controls, tune the signal generator to the image frequency and increase its output to again produce a 2-volt deflection on the VTVM. Again read the

signal generator output (second reading). Then tune the signal generator to the if. frequency and again adjust its output to produce a 2-volt deflection on the VTVM. Read the signal generator output (third reading). The ratio of the second signal generator reading to the first signal generator reading is the image rejection ratio. The ratio of the third signal generator reading to the first signal generator reading is the if. rejection ratio.

c. These measurements should be made at the center frequency of each receiver band. The test limits will be as follows:

Band	Image rejection ratio [a]	If. rejection ratio [a]
1	10, 000	10, 000
2	10, 000	10, 000
3	10, 000	10, 000
4	10, 000	10, 000
5	10, 000	10, 000
6	1, 000	10, 000
7	300	10, 000

[a] These ratios may be greater.

156. Audio Output and Fidelity

a. For this test, use a signal source consisting of an audio oscillator (par. 98) connected across diode load resistor R157, output condition No. 1 (par. 147*b*) and standard receiver setup (par. 148). Tune the audio oscillator to 1,000 cycles and adjust its output to produce a 3.5-volt receiver output. The receiver AUDIO VOLUME control (R184) may be set at any convenient position. Read audio oscillator output.

b. Without changing this output level, or any receiver controls, tune the oscillator successively from 200 cycles to 3,500 cycles in 500-cycle steps, reading the receiver output at each frequency. The receiver output at all points from 200 cycles to 2,700 cycles will be within ± 3 db of the output at 1,000 cycles; the receiver output from 2,700 to 3,500 cycles will be within ± 6 db of the output at 1,000 cycles. At the 1,000-cycle test frequency the receiver output will be increased to 5.5 volts at which level there will be no appreciable distortion.

157. Dial Calibration

a. To check the dial for correct mechanical calibration, rotate the main tuning control until the tuning capacitor is fully meshed (low-frequency end of band). Adjust the DIAL ADJ. control until the dial scale pointer coincides with the calibration line appearing on the dial. The dial scale pointer should remain at this position throughout the test. Set the frequency of a calibrated signal source to one of the test frequencies. The calibrated signal source must be of crystal accuracy. Tune the receiver to the crystal calibrated frequency for maximum indication on receiver tuning meter M101 with meter switch S109 set to IND. Read the receiver frequency dial. The difference between the receiver frequency dial reading and the frequency of the calibrated signal source (expressed as a percentage of the frequency of the calibrated source) is the dial calibration error.

b. The method of calibration (*a* above) is subject to error by reason of the mistracking between the rf circuit and the receiver local oscillator. As a result, meter M101 responds only to the mean gain of the circuits. When better accuracy for electrical calibration is required, a substitute method should be used. One method would be to inject the known calibrated input source into the grid of second rf amplifier V102 and proceed as outlined in *a* above. The most accurate calibration, however, is obtained by the following procedure.

(1) Set the receiver dial to the frequency to be checked.
(2) Connect an oscilloscope across the input to first audio amplifier V114. The oscilloscope then becomes the indicating device instead of meter M101.
(3) Turn on the BFO PITCH control switch and adjust the frequency against a 455-kc or 1,610-kc crystal calibrator oscillator (depending on the if. band in use) for a zero beat on the oscilloscope.
(4) Connect an accurately calibrated rf signal generator to the receiver input, and set to the desired frequency.
(5) The procedure given in (1), (3), and (4) above will result in a beat frequency which will be determined by the difference of *off frequency* existing between the receiver calibration and the input signal. This difference will be shown on the oscilloscope.
(6) To determine the oscilloscope frequency, connect an external calibrated audio signal source (variable to 100-kc) across the input of the oscilloscope, and adjust its frequency until a zero beat is indicated on the oscilloscope. This frequency is

the degree of OFF calibration of the receiver dial.

(7) The accuracy obtained by the above procedure will depend upon the accuracy of the equipment used and the care with which measurements are made.

c. Measure the dial calibration error at the low, middle, and high frequency points on each receiver band. The dial calibration error at 75 percent of the test points should be not greater than ±.3 percent; the dial calibration error at the remaining points should not be greater than ± 1 percent.

158. Crystal Calibration

a. To check the presence of the crystal calibrator signals, turn the calibrator on by holding function switch S108 in the CAL position. Tune the receiver to one of the crystal check points, as indicated by the red scale graduations appearing on the TUNING dial, at harmonic intervals of the crystals and observe the deflection of the tuning meter (M101 set to IND position). This deflection must be greater than .1 of full scale. In order to equal, or exceed this value of meter deflection, it may be necessary to set the SENSITIVITY control at maximum and to tune the ANT. TRIMMER control along with the main tuning control for maximum deflection. To locate a weak crystal frequency, turn on the BFO PITCH control.

b. Repeat this test at each calibration point on each band of the receiver.

159. Meter Sensitivity

a. To check the meter sensitivity, use signal source No. 1 (par. 147*a*) and standard receiver setup (par. 148). Set the signal generator without modulation to any test frequency. Tune the receiver, main tuning control, and ANT. TRIMMER to this frequency. With no signal input, and the sensitivity control in the maximum *counterclockwise* position, adjust the meter on the receiver to zero and then adjust SENSITIVITY control R171 for .1 full-scale deflection.

b. Increase the signal generator output to produce one-half of full-scale deflection. Read the signal generator output. Again increase the signal generator output to produce full-scale deflection and again read the signal generator output. The signal source No. 1 output to produce half-scale deflection and full-scale deflection should not exceed .5 microvolt and 1 microvolt respectively. The meter sensitivity should be measured at 400 kc on band 2 and at 1 mc on band 3.

Section IV. PERFORMANCE TESTS WITH LOOP ANTENNA

Note. Before making any performance tests with the loop antenna, the antenna coils must be alined as instructed in paragraph 141*c*. The tests described below in paragraphs 160 through 163 must be performed with the receiver inside its cabinet.

160. Sensitivity, Am and Cw

a. For this test, use signal source No. 2 (par. 147*a*) output condition No. 1 (par. 147*b*), and standard receiver setup (par. 148). Rotate the loop antenna to place it in the plane of the transmission line. Tune the signal generator, with modulation, to the test frequency. Tune the receiver, main TUNING dial, and ANT. TRIMMER to the signal generator frequency. With BFO PITCH control switch S103 to OFF and SENSITIVITY control R171 in maximum position, adjust the signal generator to produce a 1.3-volt output. Turn off the signal source No. 2 modulation and adjust AUDIO VOLUME control R184 to produce a .55-volt noise output.

b. Continue to readjust the signal generator output, with modulation on, and AUDIO VOLUME control R184, with modulation off, until the output with modulation is 1.3 volts, and the output without modulation is .55 volt. When this condition is reached, read the signal source No. 2 output and apply the screen room constant (fig. 81) to convert to microvolts per meter (uv/m) of field strength. This figure is the overall am sensitivity of the equipment. Repeat this measurement at the low-, middle-, and high-frequency points of each receiver band.

c. A typical screen room is shown in figure 81. There are many variations to the types and constructions. To align a direction finder receiver successfully, the most important detail is the physical relationship of the transmission line to the loop antenna. The screen room constant (note 2, fig. 81) has been calculated on the basis of the screen room size shown.

d. To measure the overall cw sensitivity of the receiver, proceed as follows:

(1) Adjust the SENSITIVITY control for a .1 reading on the meter.

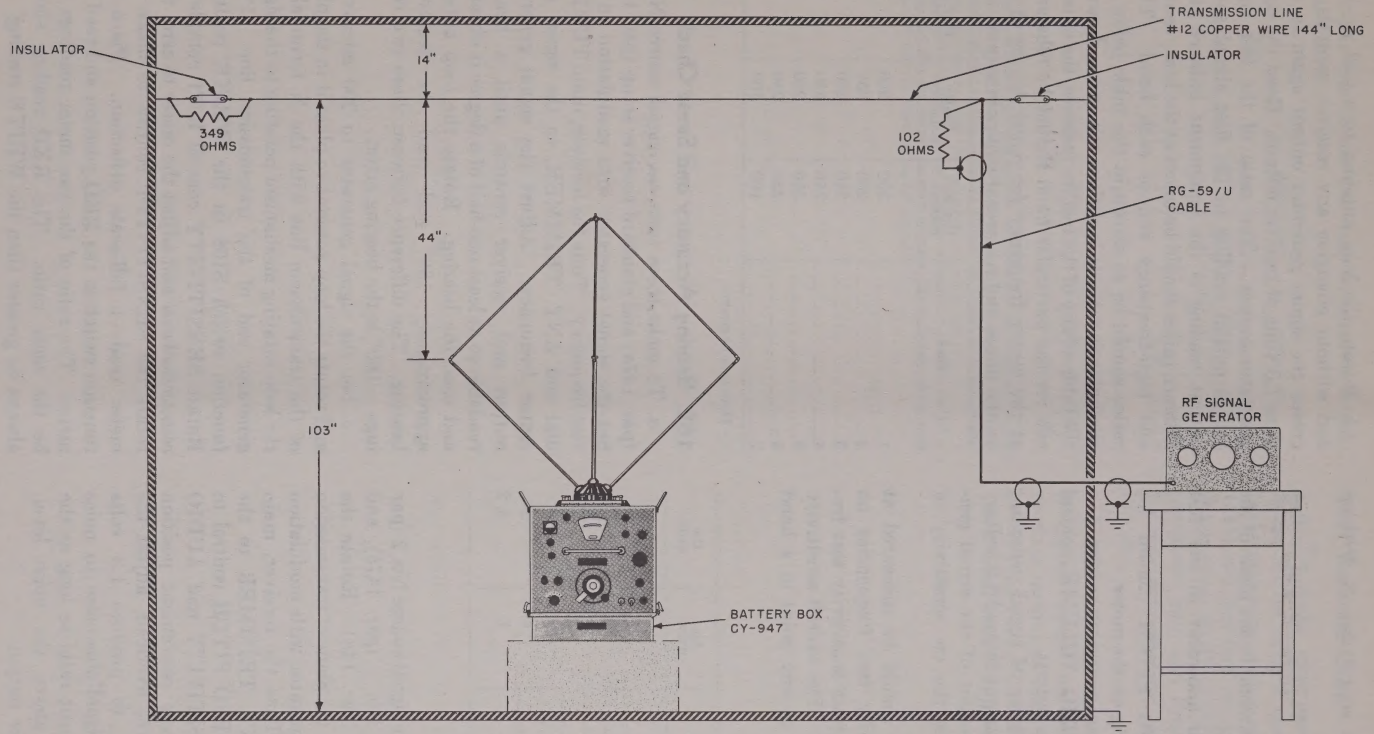

NOTES:

1. SCREEN ROOM DIMENSIONS.
   LENGTH 13' 2"
   WIDTH 9' 9"
   HEIGHT 9' 9"
2. ATTENUATION CONSTANT FOR MICRO-VOLTS/METER EQUAL TO 1/10 OF SIGNAL GENERATOR READINGS WITH ABOVE CONDITIONS.

TM677-81

Figure 81. Typical screen room setup for alinement of AN/PRD-1 with loop.

(2) Turn on signal source No. 2, without modulation.
(3) Turn on BFO PITCH control switch S103.
(4) Place the loop antenna in the plane of the transmission line.
(5) Tune the signal generator to the test frequency.
(6) Adjust the BFO PITCH control for maximum reading on the meter.
(7) Turn off the signal generator carrier.
(8) Adjust the AUDIO VOLUME control for .55 volt noise output.
(9) Turn on the carrier of signal generator and adjust the output to read 1.3 volts.
(10) Measure the output of the signal generator. This is the cw sensitivity of the receiver.

e. The cw sensitivity should be measured at one of the am sensitivity test frequencies on band 2 and at one of the am sensitivity test frequencies on band 3 only. The overall sensitivity in microvolts per meter at any point in a band should be as follows:

Band	Am uv/m	Cw uv/m
1	18	8
2	12	6
3	7.5	3.5
4	6	3
5	6	3
6	6	3
7	7	3.2

161. Balance Ratios

a. To make this test use signal source No. 2 (par 147*a*), output condition No. 1 (par. 147*b*), and standard receiver setup (par. 148). Rotate the loop antenna to place it in the plane of transmission line. Tune the signal generator with modulation to the test frequency. Tune the receiver, main TUNING dial, and ANT. TRIMMER to the signal frequency. With BFO PITCH control to OFF and receiver SENSITIVITY and AUDIO VOLUME controls in any convenient position below the point of receiver overload, adjust the signal generator output to produce 1.3 volts receiver output. The signal-plus-noise to noise ratio can be any convenient ratio as long as the signal is substantially above the noise level. Read the signal generator output.

b. Rotate the loop antenna to a null position and without changing any receiver controls, increase the signal generator output again to produce 1.3 volts of receiver output. Read the signal generator output. The ratio of the last signal source output reading to the first signal source output reading is the equipment balance ratio. Balance ratios should be taken at the low-, center-, and high-frequency end of each band. These ratios should be as shown in the table below. If the balance ratio is less than the value shown in the table at any of the test frequencies, the antenna coil for the particular band should be rebalanced at the center frequency for equal depths of null on the direct and reciprocal null points (par. 141).

Band	Low frequency[a]	Center frequency[a]	High frequency[a]
1	250	250	250
2	250	250	250
3	250	250	250
4	250	250	250
5	250	250	250
6	250	250	250
7	100	100	50

[a] These may be greater.

162. Bearing Accuracy and Sense Check

a. To make these tests, use signal source No. 2 (par. 147*a*) and standard receiver setup (par. 148). Set the signal generator with modulation to the test frequency. Tune the receiver, main TUNING dial and ANT. TRIMMER, to the signal generator frequency. Adjust the signal generator output and receiver controls until a bearing readable to at least one-half of a degree is obtained and read the bearing. Rotate the loop antenna approximately 180° and read the reciprocal bearing. The difference between these two readings —180° is the bearing error.

b. Set the signal generator to 200 microvolts and rotate the loop antenna to place it in the plane of the transmission line with the N terminal on the loop rotating mechanism pointing to the signal generator end of the transmission line. Place function switch S108 in the WHITE position. Rotate SENSITIVITY control R171 completely *counterclockwise* and adjust the meter to zero, then rotate the SENSITIVITY control to make the meter read .1 full-scale deflection. Place the function switch in the RED position and read the meter. The ratio of the two meter readings will be the sense ratio. The RED reading should always be greater than the WHITE reading.

c. The test limits and test frequencies should be as follows:

Band	Bearing error		Sense ratio	
	Low frequency	High frequency	Low frequency	High frequency
1	1°	1°	5	5
2	1°	1°	3. 5	3. 5
3	1°	1°	3	3
4	1°	1°	2	2
5	1°	1°	[b] 2	[b] 2
6	1°	1°	[b] 2	[b] 2
7	1°	[a] 2°	[b] 2	[b] 2

[a] Above 20 mc the difference between the direct and the reciprocal bearings minus 180°, should not exceed 40°. However, the average of the direct and reciprocal bearing at this frequency should not depart from the average bearing obtained at other test frequencies by more than 2°.

[b] On bands 5, 6, and 7, a 5-$\mu\mu$f capacitor is connected between the transmission line and the top of the sense antenna (fig. 81) when taking sense ratios, and removed when taking balance ratios.

163. Receiver Gain

a. To make this test, set up the direction finder set for normal operation in a screen room, free from noise, with output condition No. 1 (par. 147*b*) and standard receiver setup (par. 148). Set the receiver AUDIO VOLUME control (R184) to maximum gain and tune the ANT. TRIMMER for maximum receiver output. Read this output in volts.

b. Perform this test at the low- and high-frequency points on each receiver band. The receiver output at each test frequency should be at least .55 volt. This test may be combined with the overall sensitivity test.

CHAPTER 9

SHIPMENT AND LIMITED STORAGE AND DEMOLITION TO PREVENT ENEMY USE

Section I. SHIPMENT AND LIMITED STORAGE

164. Disassembly

Direction Finder Set AN/PRD–1 is designed so that instructions for disassembly or assembly (pars. 11–17) are few and simple to follow. The entire set, except the power cord and headset, is assembled on each piece of equipment with permanently mounted holding clamps or screws. The only difference in disassembly, as well as assembly, is whether it is tripod or jeep mounted.

a. If the direction finder set is mounted on the jeep—

(1) Carefully remove the antennas from the antenna assembly mount.

(2) Remove the power cord and headset.

(3) Loosen the four receiver holding screws (fig. 24) and remove the receiver and power supply from the jeep.

(4) Detach the receiver from the power supply and prepare for packaging.

Note. If the jeep mounting is to be removed, refer to paragraph 32 and figure 87.

b. If the direction finder set is mounted on the tripod—

(1) Proceed as in (1) and (2) above.

(2) Loosen the attaching hand screw (fig. 13) and remove the receiver and power supply from the tripod.

(3) Detach the receiver from the power supply, fold the tripod, and prepare it for packaging.

165. Packaging

The components of Direction Finder Set AN/PRD–1 are packaged as described below.

a. Inclose the technical literature within a close-fitting bag fabricated of waterproof barrier material and seal it properly.

b. Place the Surveyors Magnetic Compass MX–1454/U and fittings within the carrying case—

(1) Fill all voids with flexible, corrugated paper to prevent movement, and close and secure the case cover.

(2) Inclose the case and its contents within a close-fitting bag that is fabricated of waterproof barrier material and seal it.

c. Place and secure Radio Receiver R–395/PRD–1 within Electrical Equipment Cabinet CY–946/PRD–1; then place the receiver cabinet and Battery Box CY–947/PRD–1 within Electrical Standardized Components Case CY–949/PRD–1—

(1) Fill all voids with flexible corrugated paper to prevent movement.

(2) Cushion the case and its contents on all surfaces with cells, pads, or both, fabricated of double-faced, corrugated fiberboard designed to absorb the shock of impact normally encountered in handling and transit.

(3) Place each cushioned case within a close-fitting, water-resistant, suitable-style and grade fiberboard box.

(4) Seal the entire box closure, corners, and joints with water-resistant, pressure-sensitive tape.

d. The test and power cords are packaged as follows:

(1) Wind each cord into a coil of proportionate dimensions and tie it at three places with cotton tape.

(2) Secure the connectors to the coil with the ties.

e. Package Electrical Standardized Components Case CY–950/PRD–1, which contains Antenna AS–536/PRD–1, Antenna AT–301/PRD–1, and

Direction Finder Set Tripod MT–870/PRD–1, as follows:

(1) Place the antenna assembly, antenna, and tripod within the designated compartments of the case and secure them.

(2) Fill voids with flexible, corrugated paper to prevent movement.

(3) Close the lid of the case and secure the fastenings.

(4) Follow the procedure for receiver carrying case CY–949/PRD–1 (*c* above) to complete packaging.

f. Place Electrical Standardized Components Case CY–954/PRD–1, which contains Dynamotor-Power Supply DY–79/PRD–1 in Electrical Equipment Cabinet CY–948/PRD–1, power cords, spare parts, and accessories packaged as specified, within the designated compartments of the case and secured—

(1) Fill voids with flexible, corrugated paper to prevent movement.

(2) Close the lid of the case and secure the fastenings.

(3) Follow the procedure for receiver carrying case CY–949/PRD–1 (*c* above) to complete the packaging.

g. Package Direction Finder Support Set MT–1283/PRD–1 as follows:

(1) Place the supports within a close-fitting, suitable-style and grade, water-resistant fiberboard box.

(2) Fill voids with flexible, corrugated paper to prevent movement.

(3) Seal the entire box closure, corners, and joints with water-resistant, pressure-sensitive tape.

166. Field Repackaging Data

a. Materials Required. The following chart lists the estimated amount of materials required to prepare the direction finder set for shipment:

Materials	Amount
Waterproof barrier	181 sq ft.
Single-faced, flexible, corrugated paper	362 sq ft.
Gummed paper tape	61 ft.
Flat steel strapping	37 ft.
Wooden shipping crates	4 ea.

b. Construction of Wooden Shipping Crate. Construct the wooden shipping crate to allow approximately a 2-inch clearance between the packaged components and the sides, ends, and the top of the crate. Each component is constructed separately and of a size to provide a crate with inner dimensions as listed in paragraph 8*a*. A typical packing crate is shown in figure 16.

c. Strapping. Strap the shipping crate for intertheater shipment only. The strapping should run as shown in figure 16.

d. Marking. Mark the shipping containers in accordance with the requirements of Section II, SR 55–720–1, Transportation and Travel, Preparation for Oversea Movement of Units (POM).

Section II. DEMOLITION OF MATERIEL TO PREVENT ENEMY USE

167. General

The demolition procedure outlined in paragraph 168 will be used to prevent the enemy from using or salvaging this equipment. Demolition of the equipment will be accomplished only upon order of the commander.

168. Methods of Destruction

a. Smash. Smash tubes, coils, and capacitors; use sledges, axes, handaxes, pickaxes, hammers, crowbars or heavy tools.

b. Cut. Cut cords and wiring; use axes, handaxes, and machetes.

c. Burn. Burn cords, resistors, capacitors, coils, wiring, and technical manuals; use gasoline, kerosene, oil, flame throwers, or incendiary grenades.

d. Bend. Bend panels and chassis.

e. Explode. If explosives are necessary, use firearms, grenades, or TNT.

f. Disposal. Bury or scatter the destroyed parts in slit trenches, fox holes, or other holes, or throw them into the streams.

g. Destroy. Completely destroy everything.

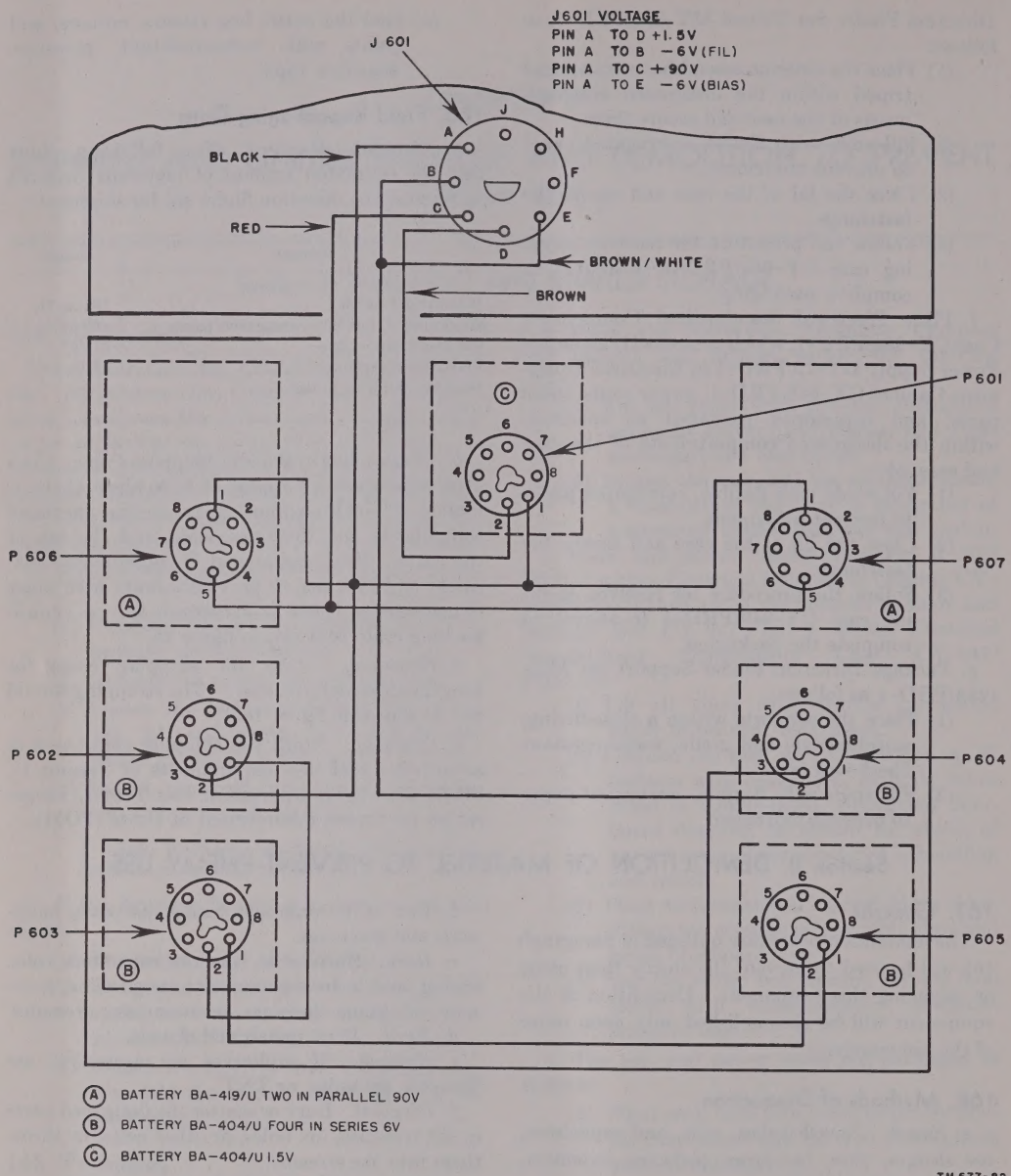

Figure 82. Battery Box CY-947/PRD-1, wiring diagram.

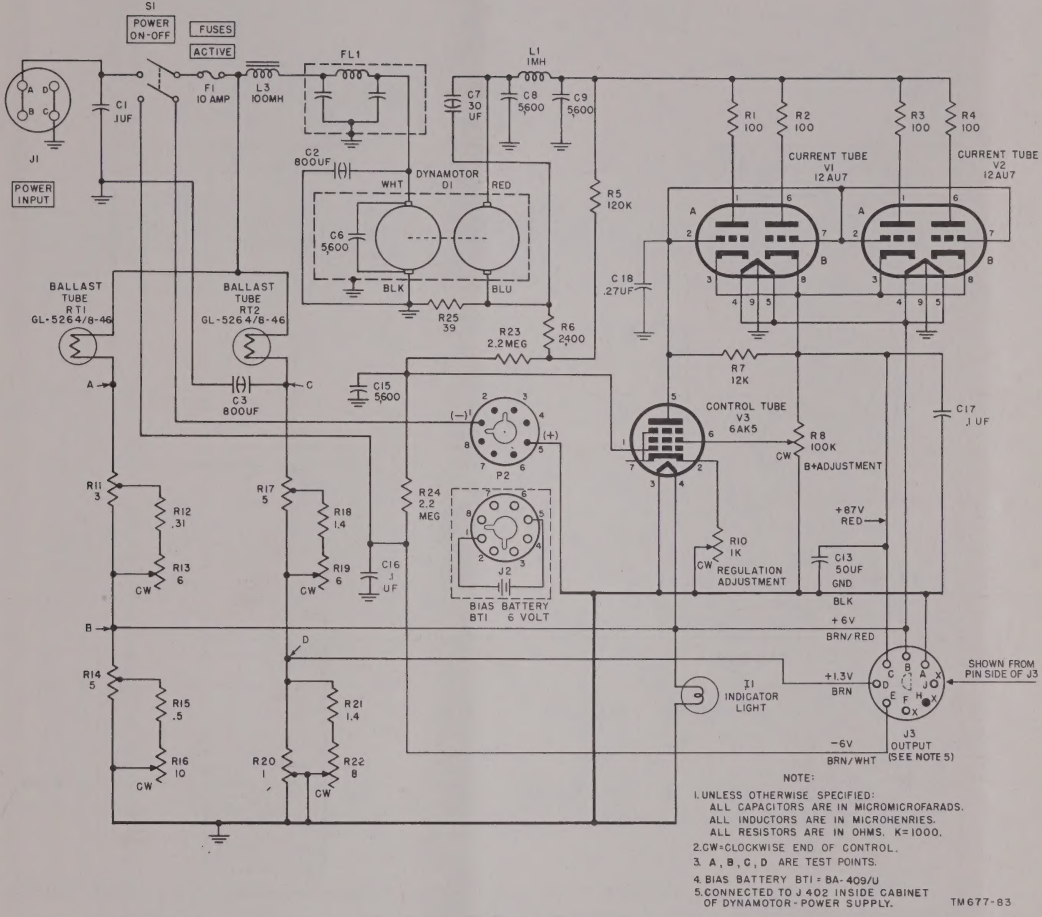

Figure 83. Dynamotor-Power Supply DY-79/PRD-1, schematic diagram.

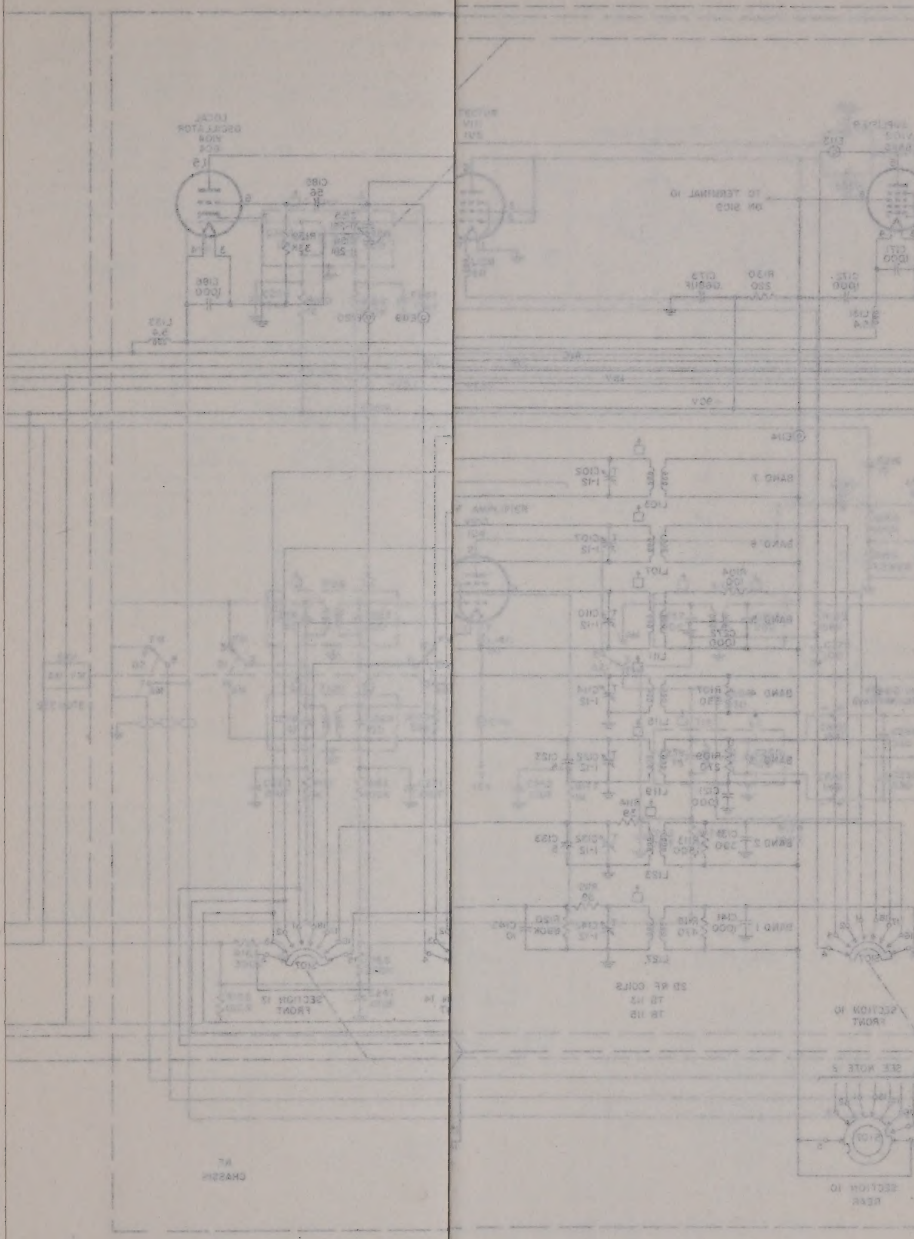

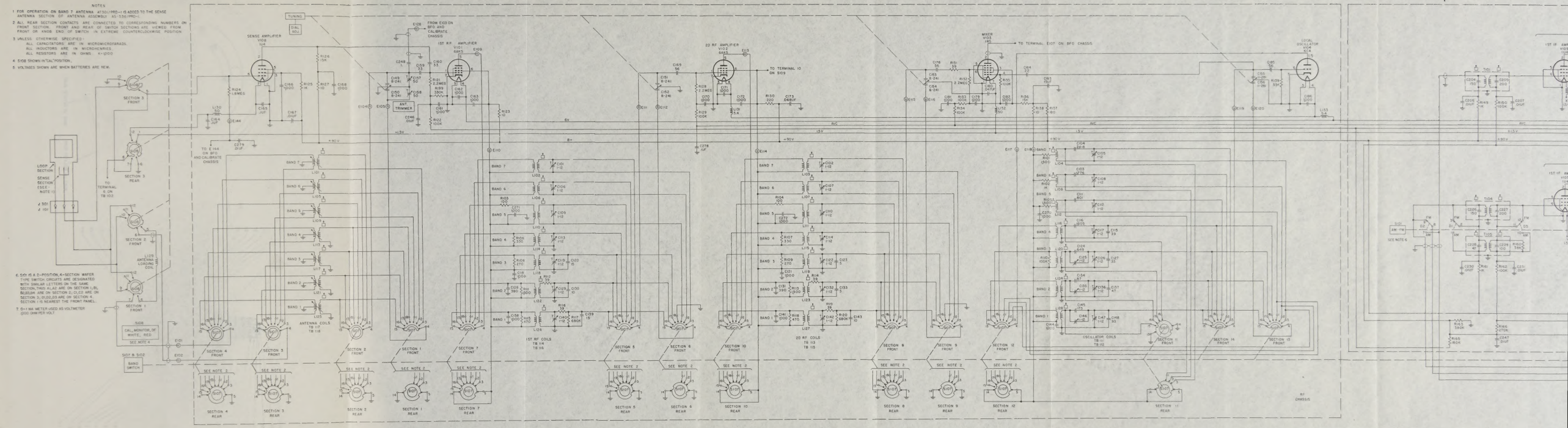

Figure 84. Radio Receiver R-395/PRD-1, schematic diagram.

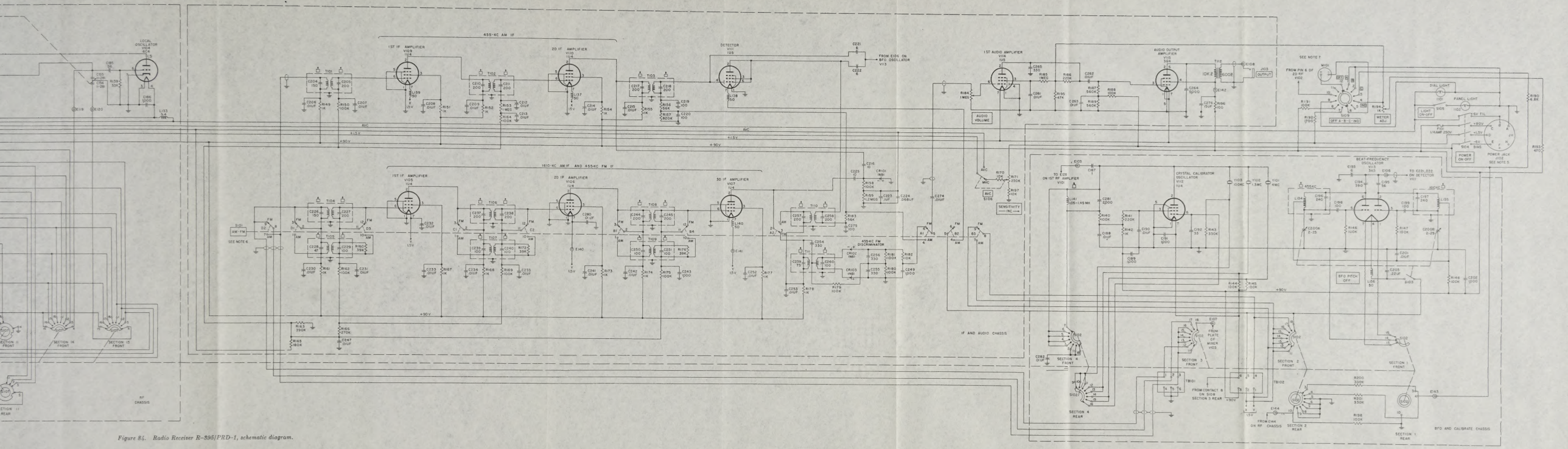

Figure 84. Radio Receiver R-395/PRD-1, schematic diagram.

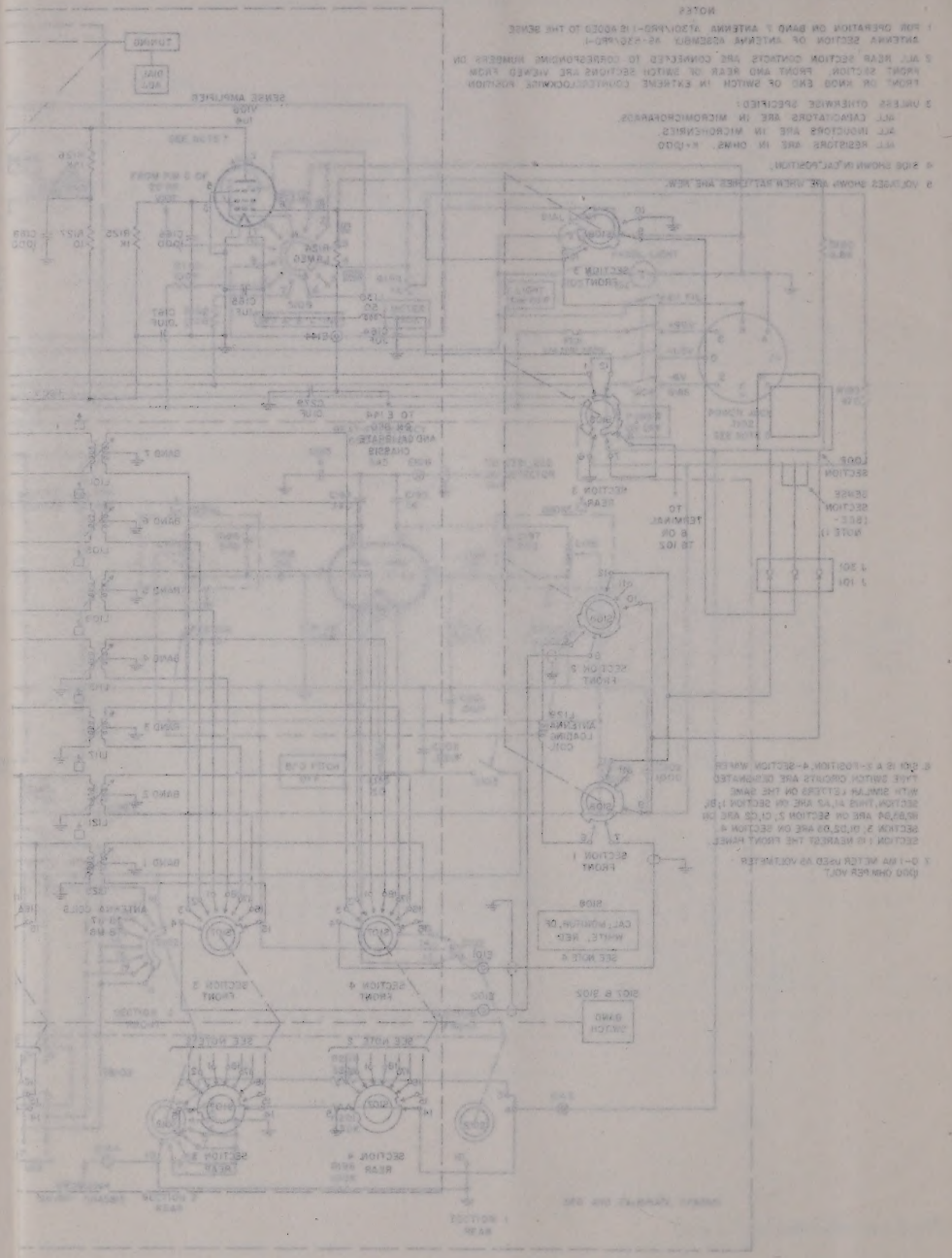

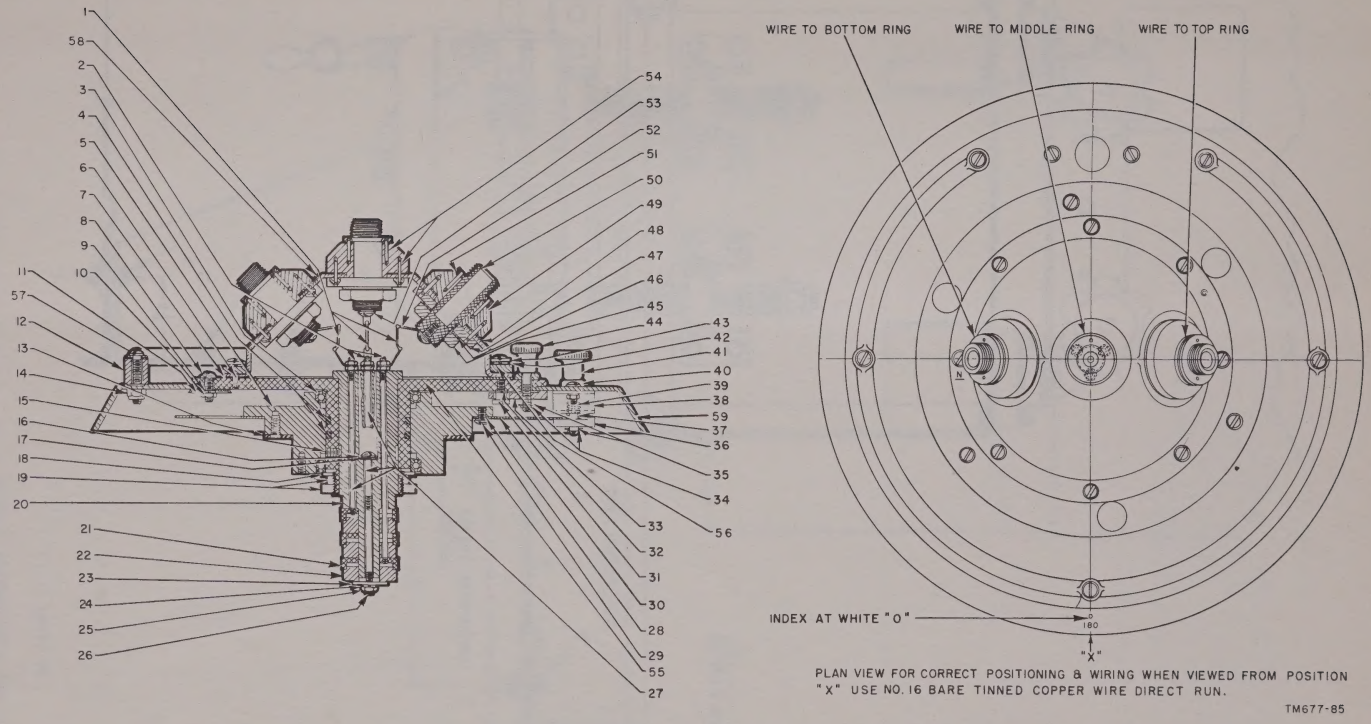

Figure 85. Rotary antenna assembly mount, cross-section view.

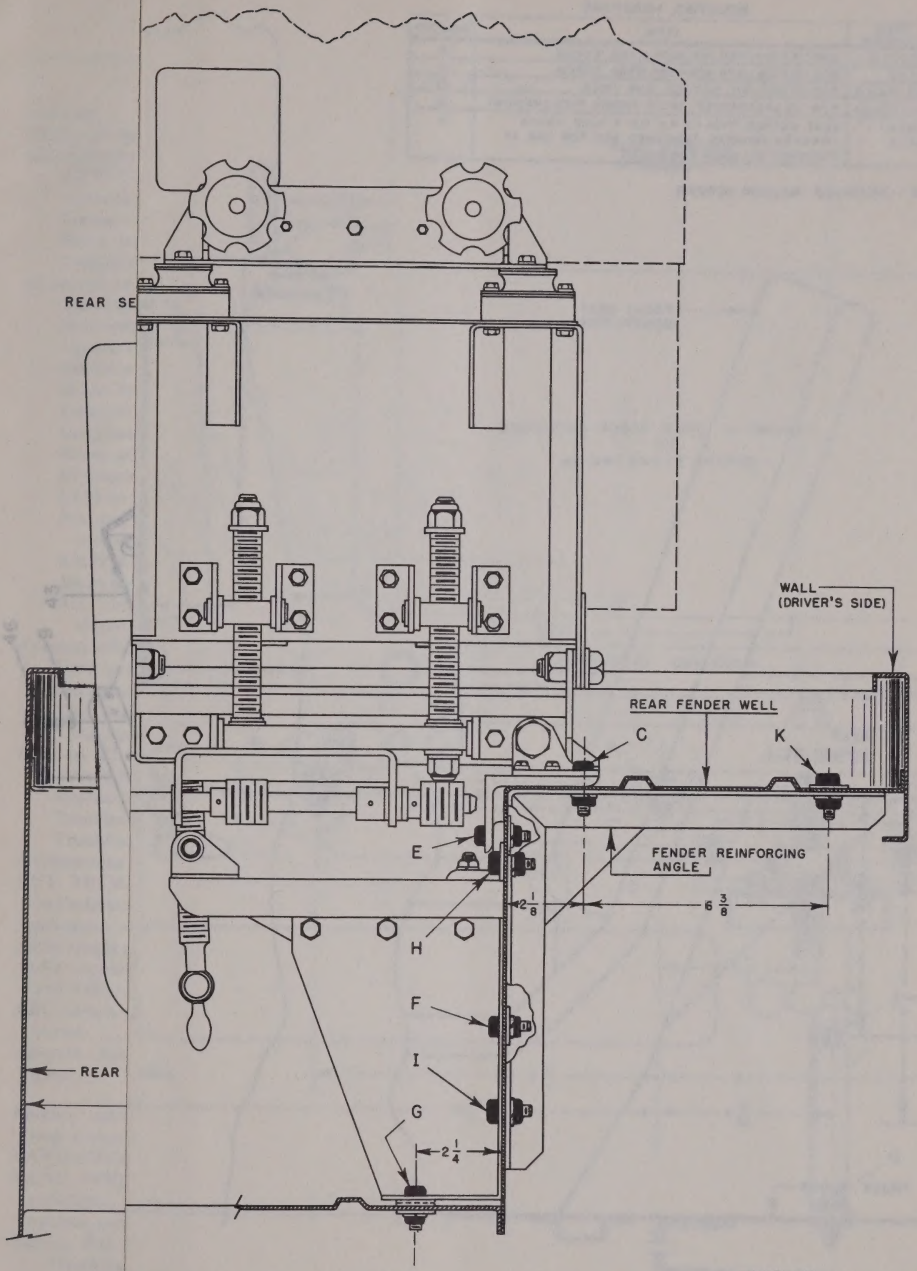
REAR SE
WALL
(DRIVER'S SIDE)
REAR FENDER WELL
C
K
E
FENDER REINFORCING
ANGLE
2 1/8
6 3/8
H
F
I
G
2 1/4
REAR

TM677-86

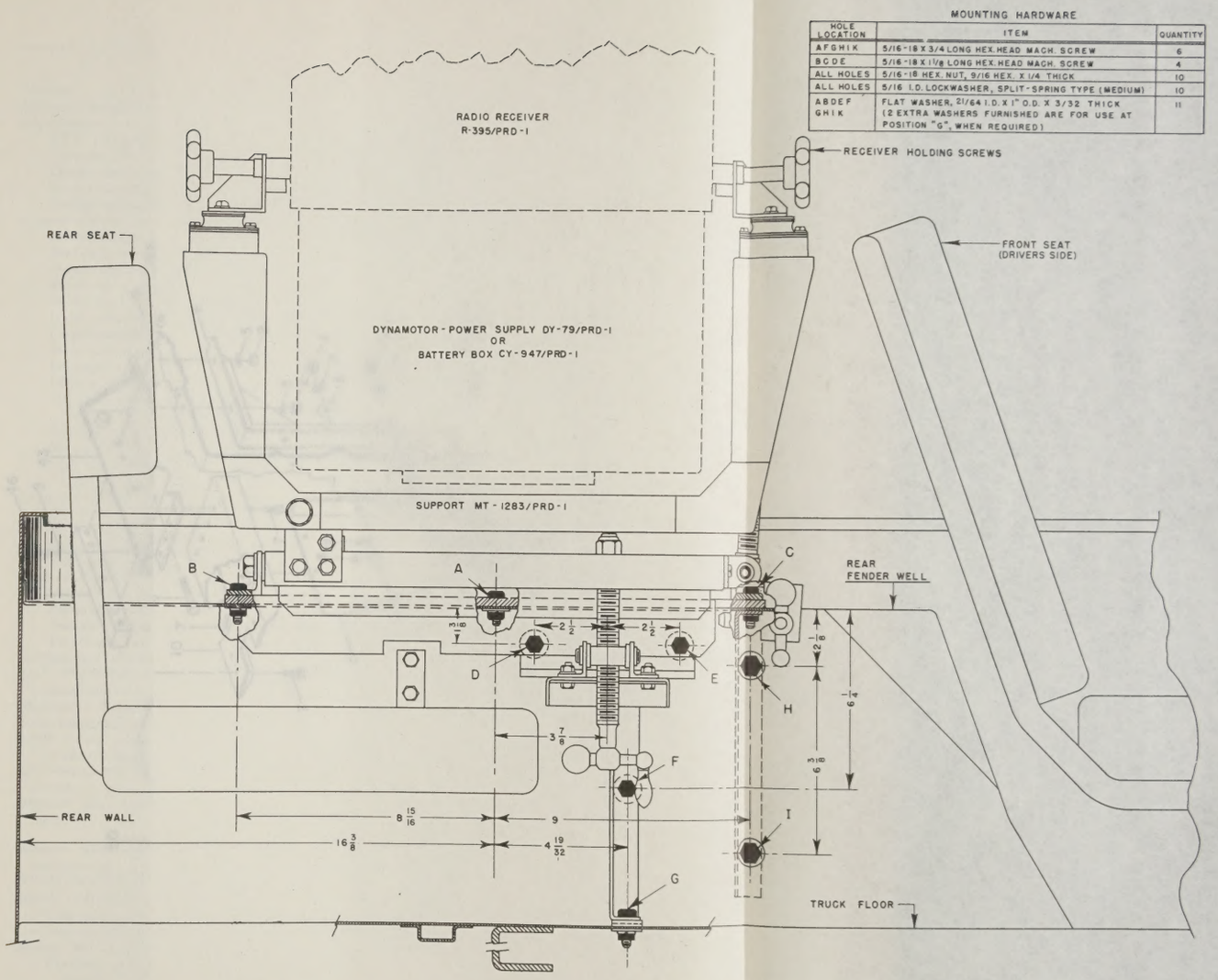

Figure 86. Direction Finder Set Support MT-1283/PRD-1, vehicular installation drawing.

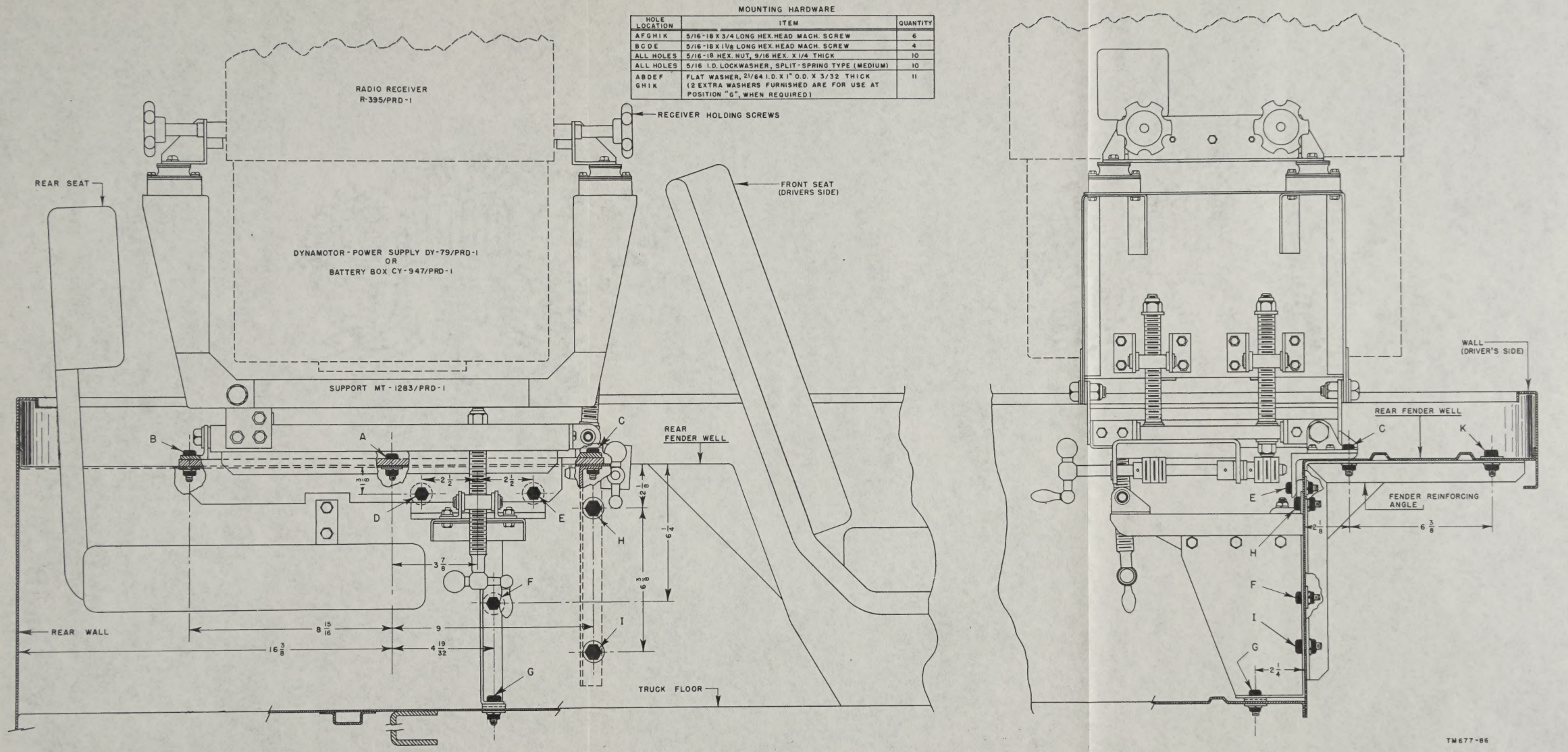

Figure 86. Direction Finder Set Support MT-1283/PRD-1, vehicular installation drawing.

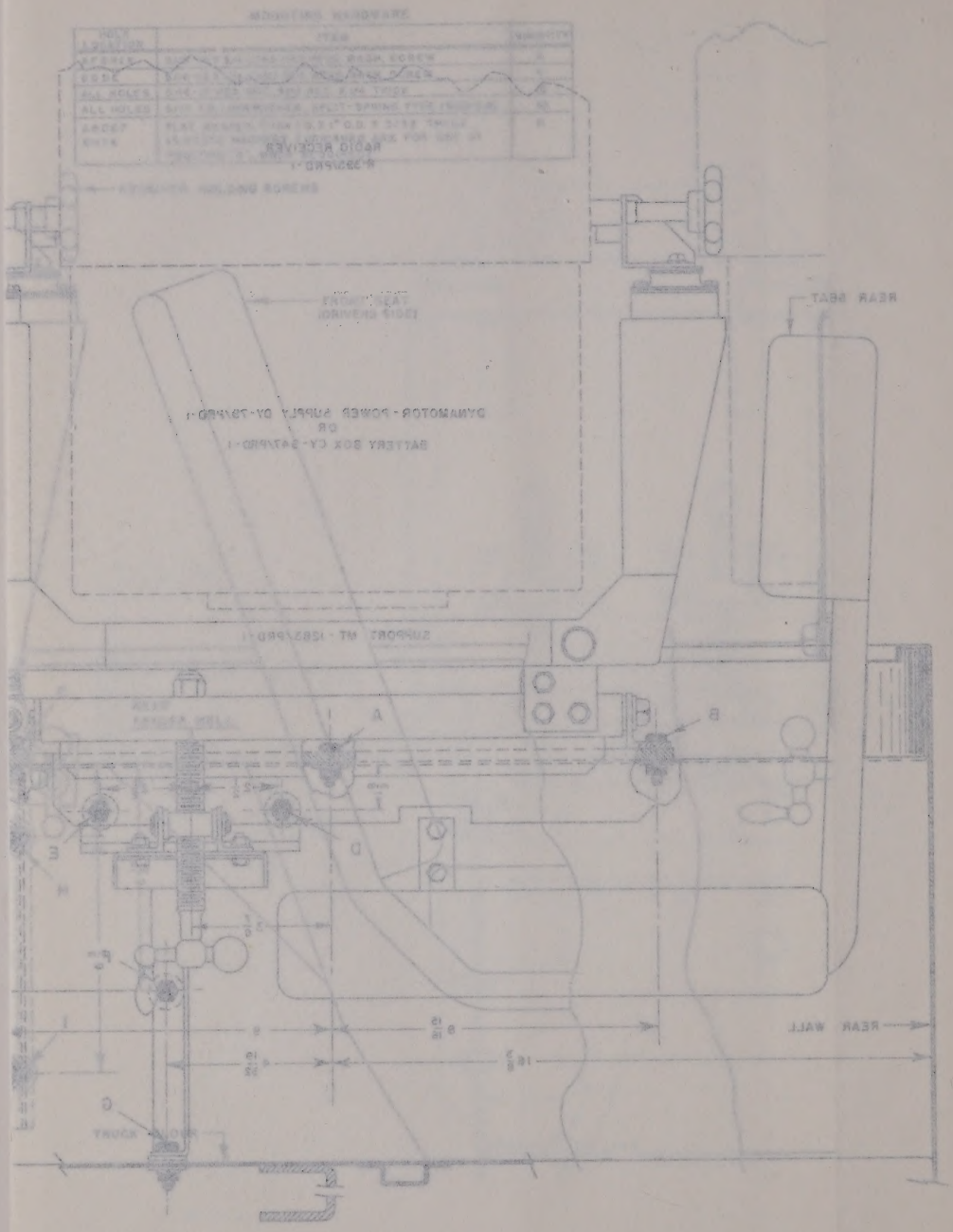

Fig. 30. Direction Finder Set Support MT-1285/PRD-1, reference installation drawing.

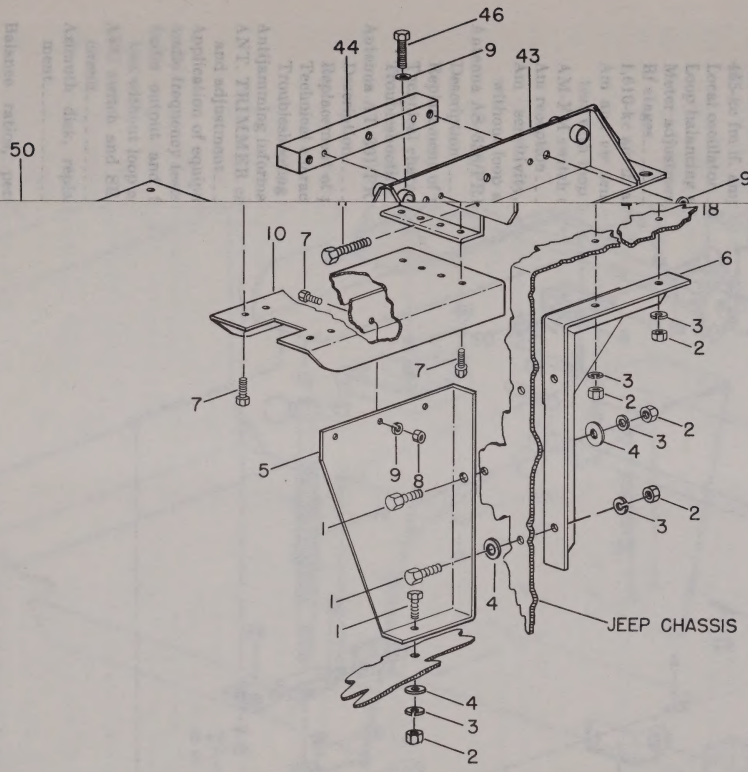

Figure 87. Direction Finder Set Support MT–1283/PRD–1, exploded view.

363564 O - 55 (Face blank p. 128) No. 2

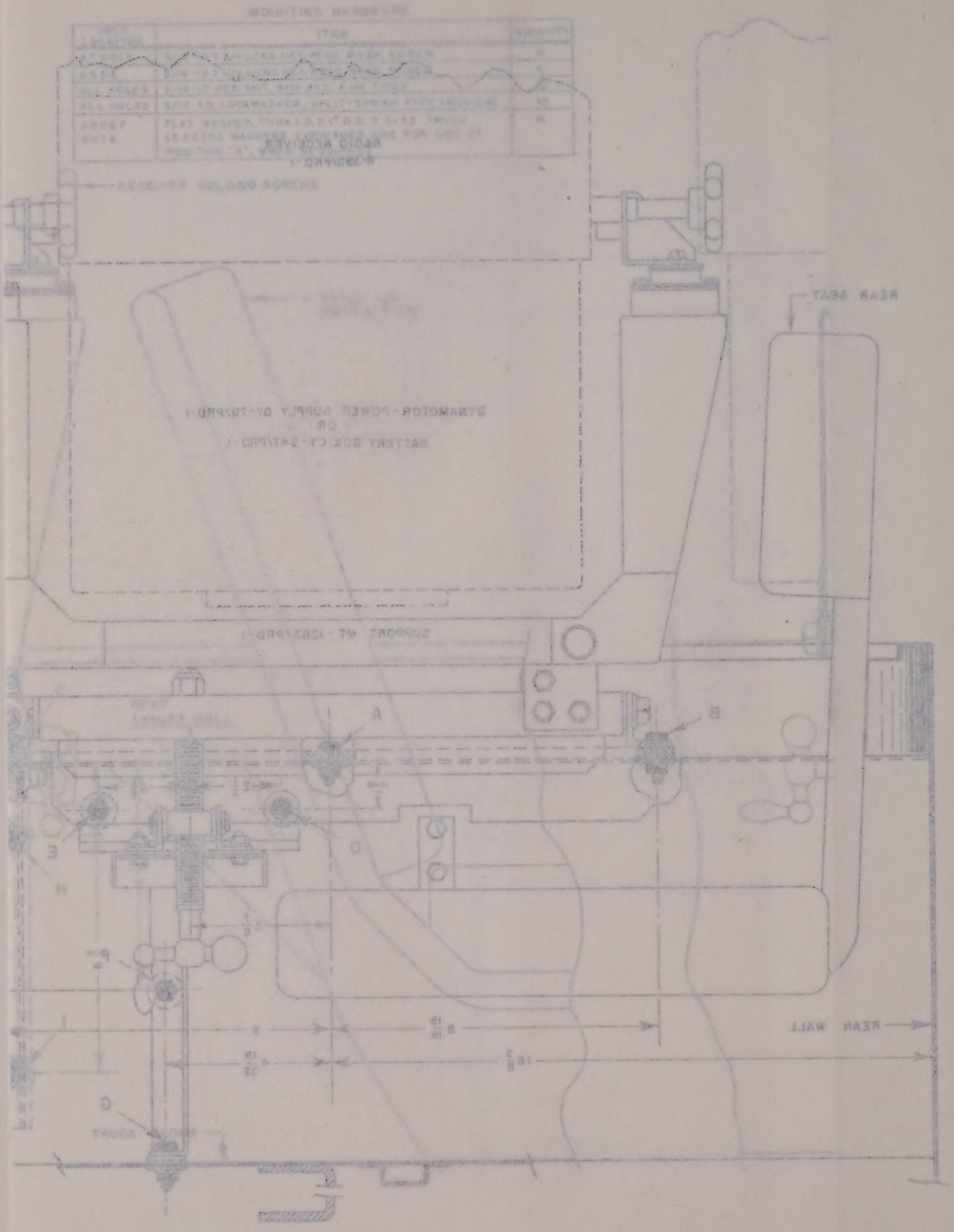

Figure 10. Direction Finder Set Support MT-1258/PRD-1, shoulder installation drawing.

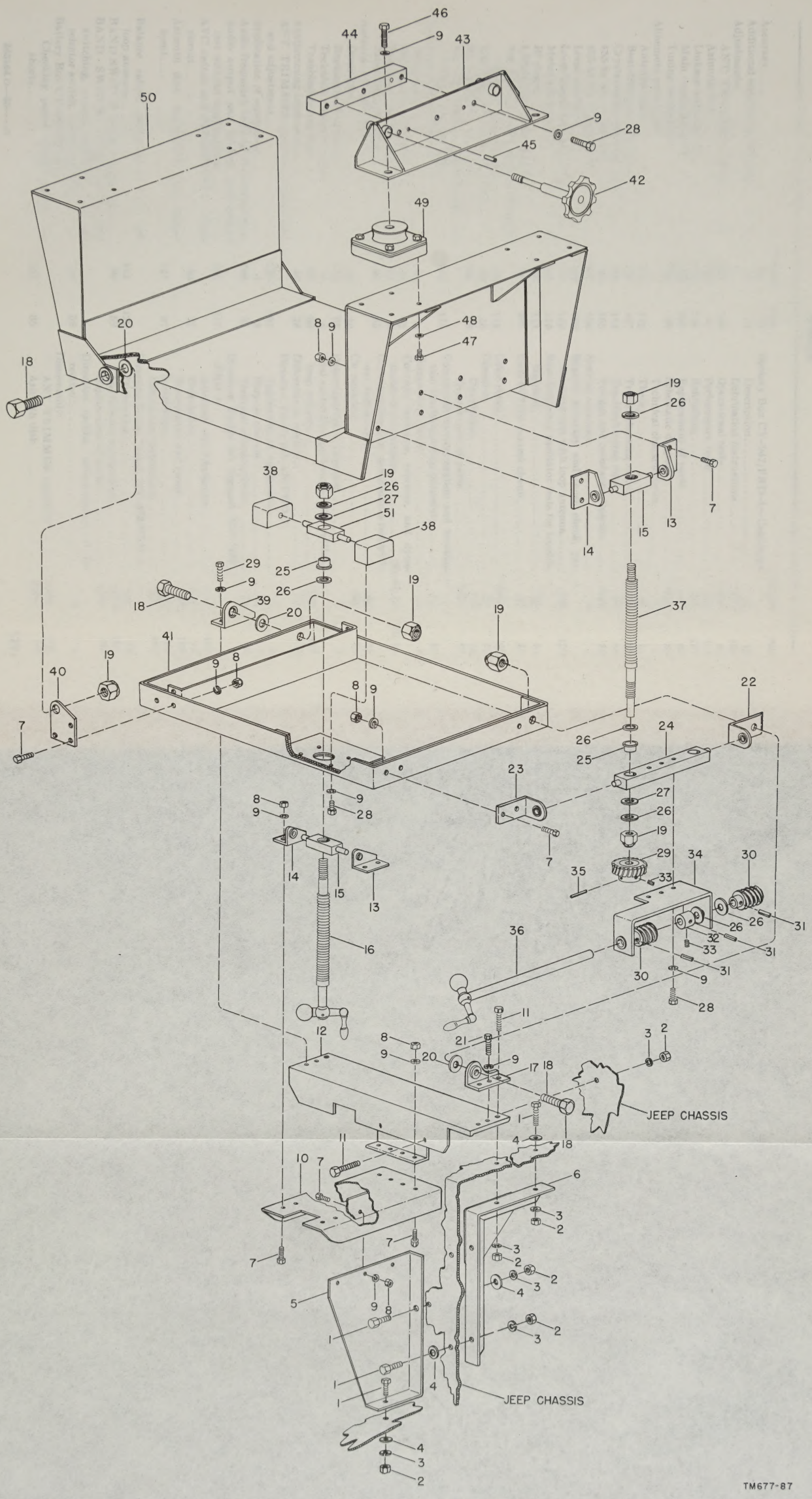

Figure 87. Direction Finder Set Support MT-1283/PRD-1, exploded view.

363564 O - 55 (Face blank p. 128) No. 2

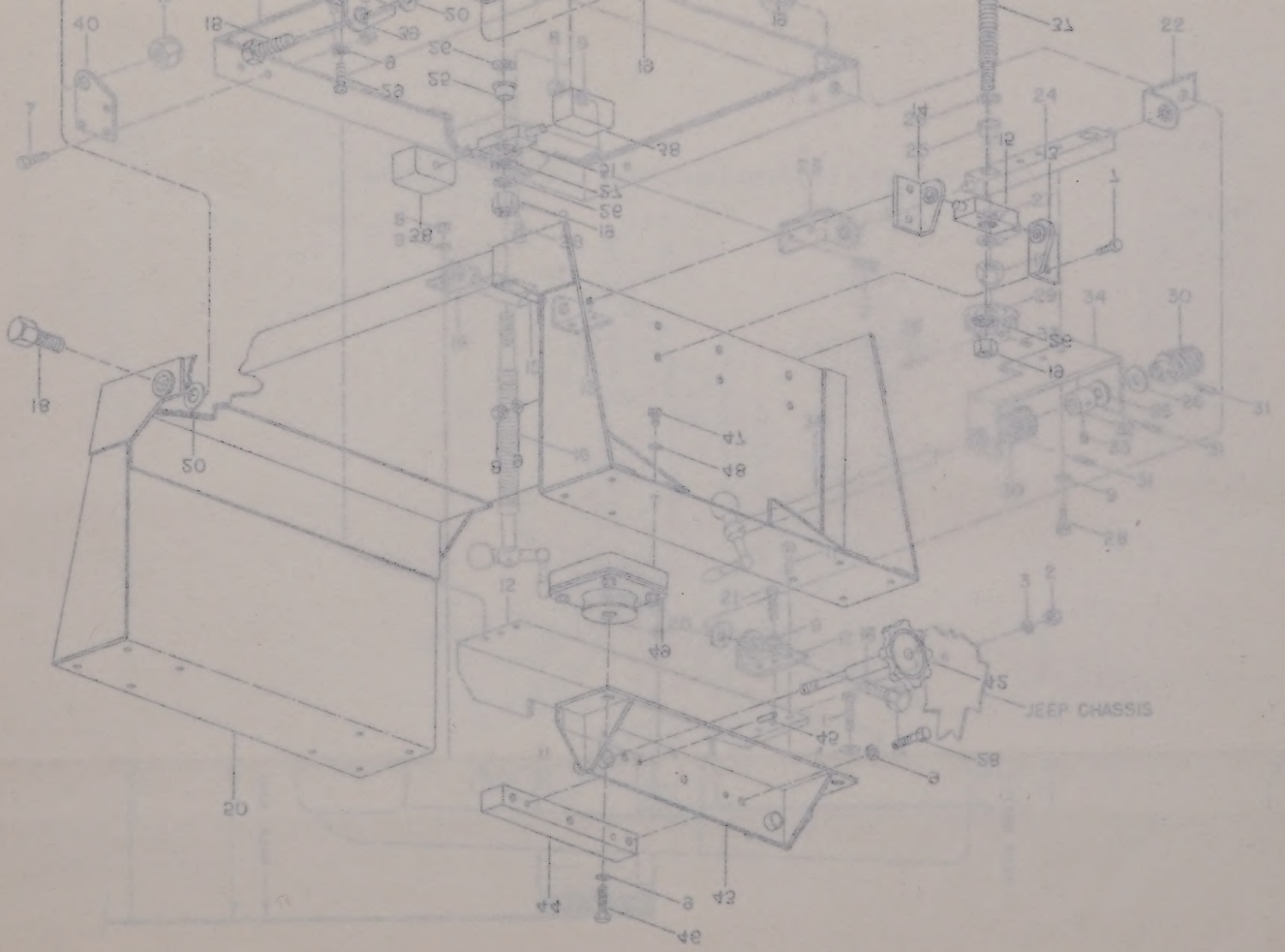
JEEP CHASSIS

INDEX

	Paragraph	Page
Accuracy	43	28
Additional equipment required	18	13
Adjustments:		
ANT. TRIMMER capacitor	125	101
Azimuth disk	121	97
Linkage adjustments	124	101
Main tuning capacitor	123	101
Tuning mechanism	122	98
Alinement procedure:		
Antenna stage	141	112
Beat-frequency oscillator	138	107
Crystal calibrator adjustment	143	113
455-kc am if. amplifiers	135	105
455-kc fm if. amplifiers	137	106
Local oscillator	139	109
Loop balancing adjustment	142	112
Meter adjustment	144	113
Rf stages	140	111
1,610-kc am if. amplifiers	136	106
Am and cw sensitivity, performance test with loop antenna	160	118
AM-FM switch control circuit	86	56
Am reception	42*a*	28
Am sensitivity, performance test without loop antenna	152	115
Antenna AS–536/PRD–1:		
Description	11	9
Replacement of parts	116	95
Technical characteristics	7*b*	6
Troubleshooting data	97	63
Antenna AT–301/PRD–1:		
Description	12	10
Replacement of parts	116	95
Technical characteristics	7*c*	6
Troubleshooting data	97	63
Antijamming information	46	29
ANT. TRIMMER capacitor, replacement and adjustment	125	101
Application of equipment	4	3
Audio frequency tests for troubleshooting	108	91
Audio output and fidelity, performance test without loop antenna	156	117
AVC switch and SENSITIVITY control circuit	88	57
Azimuth disk, replacement and adjustment	121	97
Balance ratios, performance test with loop antenna	161	120
BAND SWITCH (S107) control circuit	90	59
BAND SWITCH (S102), if filament switching, crystal calibrator, and bfo selector switch, control circuit	91	59
Battery Box CY–947/PRD–1:		
Checking power supply circuits for shorts	100	65
Battery Box CY–947/PRD–1—Continued		
Description	15	12
Lubrication instructions	127*d*	102
Operational tests	103*b*	67
Performance tests	150	115
Refinishing	128	102
Replacement of parts	119	97
Schematic diagram	105*d*	86
Technical characteristics	7*f*	7
Theory	93	61
Troubleshooting chart	104	67
Troubleshooting data	97	63
Voltage and resistance diagram	105*b*	86
Bearing accuracy	6	4
Bearing accuracy and sense check, performance test with loop antenna	162	120
Beat-frequency oscillator tests for troubleshooting	110	92
BFO PITCH control circuit	87	56
Color codes	106*e*	91
Compass	23	17
Description	16*f*	12
Replacement of parts	120*d*	97
Component sectionalization and localization troubleshooting procedure	94	62
Components, table	9	8
Controls (antenna, receiver, and dynamotor-power supply)	35, 36, 37	25, 26
Crystal calibration, performance test without loop antenna	158	18
Cw reception	42*b*	28
Determination of direction	5	4
Dial calibration, performance test without loop antenna	157	117
Difference in models	19	14
Direction Finder Set AN/PRD–1:		
Application of equipment	4	3
Purpose and use	3	3
Technical characteristics	7*a*	6
Direction Finder Set Support MT–1283/PRD–1:		
Assembly and lubrication	131	104
Description	16*g*	13
Disassembly and repair	130	103
Installation	129	102
Lubrication instructions	127*f*	102
Direction Finder Tripod MT–870/PRD–1:		
Description	16*b*	13
Lubrication instructions	127*e*	102
Replacement of parts	120*a*	97
Direction finding, determination of direction	5	4
Disassembly:		
ANT. TRIMMER capacitor	125*a*	101
Azimuth disk	121*a*	97

363564 O—55——9

	Paragraph	Page
Disassembly—Continued		
Dial window	117*c*	96
Direction Finder Set Support MT–1283/PRD–1	130	103
Linkage adjustments	124*a*	101
Main tuning capacitor	123*a*	101
Tuning mechanism	122*a*	98
Dynamotor-Power Supply DY–79/PRD–1:		
Checking power supply circuits for shorts	99	64
Description	14	11
Illustrations, exterior and interior view	105*c*	86
Lubrication instructions	127*c*	102
Operational tests	103*a*	67
Performance tests	151	115
Refinishing	128	102
Replacement of parts	118	96
Running spares	17	13
Schematic diagram	105*d*	86
Technical characteristics	7*e*	6
Theory	92	60
Troubleshooting chart	104	67
Troubleshooting data	97	63
Voltage and resistance diagram	105*b*	86
Electrical Equipment Cabinet CY–946/PRD–1, lubrication instructions	127*b*	102
Electron type replacement procedure	64*b*	37
Equipment performance checklist	66*f*	39
Equipment required for final testing	147	114
Field repackaging data	166	123
Final testing:		
Equipment required	147	114
Purpose	145	114
Standard receiver setup	148	114
Standard test conditions	146	114
Standard test frequencies	149	115
Fm reception	42*c*	28
Fm sensitivity, performance test without loop antenna	153	116
Forms and records	2	3
Function switch control circuit	89	57
Fuses	38	26
Headset:		
Description	16*e*	12
Replacement of parts	120*c*	97
Icw reception	42*a*	28
Illustrations, exterior and interior views:		
Dynamotor-Power Supply DY–79/PRD–1	105*c*	86
Radio Receiver R–395/PRD–1	105*c*	86
Image and if. rejection ratio, performance test without loop antenna	155	116
Installation of Direction Finder Set Support MT–1283/PRD–1	129	102
Intermediate frequency tests for troubleshooting:		
455-kc am if. amplifiers	109	92
455-kc fm if. amplifiers	112	93
1610-kc am if. amplifiers	111	92
Jeep mounting	32	20
LIGHT switch control circuit	84	54
Linkage adjustments, replacement and adjustment	124	101
Localization and sectionalization of components for troubleshooting	94	62
Lubrication	60	36
Lubrication instructions:		
Battery Box CY–947/PRD–1	127*d*	102
Direction Finder Set Support MT–1283/PRD–1	127*f*	102
Direction Finder Tripod MT–870/PRD–1	127*e*	102
Dynamotor-Power Supply DY–79/PRD–1	127*c*	102
Electrical Equipment Cabinet CY–946/PRD–1	127*b*	102
Radio Receiver R–395/PRD–1	127*a*	101
Main tuning capacitor, replacement and adjustment	123	101
Meter sensitivity, performance test without loop antenna	159	118
Meter switch control circuit	85	55
Methods of destruction	168	123
Minor components, number and type	16*a*	12
Nomenclature assignments	10	9
Operating procedure	42	28
Operational tests:		
Battery Box CY–947/PRD–1	103*b*	67
Dynamotor-Power Supply DY–79/PRD–1	103*a*	67
Radio Receiver R–395/PRD–1	102	66
Operation in arctic, tropical, and desert climates	48, 49, 50	30
Orientation	33	20
Output conditions for alinement of Radio Receiver R–395/PRD–1	133	105
Overall selectivity, performance test without loop antenna	154	116
Packaging	165	122
Packing data	8	7
Painting	62	37
Performance tests:		
Am and cw sensitivity, with loop antenna	160	118
Am sensitivity, without loop antenna	152	115
Audio output and fidelity, without loop antenna	156	117
Balance ratios, with loop antenna	161	120
Battery Box CY–947/PRD–1	150	115
Bearing accuracy and sense check, with loop antenna	162	120
Crystal calibration, without loop antenna	158	118
Dial calibration, without loop antenna	157	117
Dynamotor-Power Supply DY–79/PRD–1	151	115
Fm sensitivity, without loop antenna	153	116
Image and if. rejection ratio, without loop antenna	155	116

Performance tests—Continued	Paragraph	Page
Meter sensitivity, without loop antenna	159	118
Overall selectivity, without loop antenna	154	116
Receiver gain, with loop antenna	163	121
Power cords:		
Description	16c	12
Replacement of parts	120b	97
POWER switch control circuit	84	54
Preliminary starting procedure	39	26
Preventive maintenance:		
Definition	54	33
Exterior	57	33
Forms	56	33
Interior	58	36
Techniques	55	33
Radio frequency tests for troubleshooting	113	93
Radio Receiver R–395/PRD–1:		
Am and cw sensitivity, performance test with loop antenna	160	118
AM-FM switch control circuit	86	56
Am sensitivity, performance test without loop antenna	152	115
Antenna stage, alinement procedure	141	112
Audio output amplifier, stage analysis	82	53
Audio output and fidelity, performance test without loop antenna	156	117
Automatic volume control, stage analysis	83	53
AVC switch and SENSITIVITY control circuit	88	59
Balance ratios, performance test with loop antenna	161	120
BAND SWITCH (S102)	91	59
BAND SWITCH (S107) control circuit	90	59
Bearing accuracy and sense check, performance test with loop antenna	162	120
Beat-frequency oscillator, alinement procedure	138	107
Beat-frequency oscillator, stage analysis	79	51
BFO PITCH control circuit	87	56
Block diagram	68	42
Checking power supply circuits for shorts	101	65
Crystal calibration, performance test without loop antenna	158	118
Crystal calibrator adjustment, alinement procedure	143	113
Crystal calibrator oscillator, analysis	73	45
Description	13	10
Detector, stage analysis	80	51
Dial calibration, performance test without loop antenna	157	117
Disassembly for lubrication	126	101
First audio amplifier, stage analysis	81	52
First rf amplifier, stage analysis	71	43

Radio Receiver etc.—Continued	Paragraph	Page
455-kc am if. amplifiers, alinement procedure	135	105
455-kc am if. amplifiers, stage analysis	76	49
455-kc fm discriminator, stage analysis	78	50
455-kc fm if. amplifiers, alinement procedure	137	106
455-kc fm and 1,610-kc am if. amplifiers, stage analysis	77	49
Fm sensitivity, performance test without loop antenna	153	116
Function switch control circuit	89	57
Illustrations, exterior and interior views	105c	86
Image and if. rejection ratio, performance test without loop antenna	155	116
LIGHT switch control circuit	84	54
Local oscillator, alinement procedure	139	109
Local oscillator, stage analysis	74	46
Loop balancing adjustment, alinement procedure	142	112
Lubrication instructions	127a	101
Meter adjustment, alinement procedure	144	113
Meter sensitivity, performance test without loop antenna	159	118
Meter switch control circuit	85	55
Mixer, stage analysis	75	48
Operational test	102	66
Overall selectivity, performance test without loop antenna	154	116
POWER switch control circuit	84	54
Receiver gain, performance test with loop antenna	163	121
Refinishing	128	102
Replacement of parts	117	96
Resistances of transformer windings and coils	106a	87
Rf stages, alinement procedure	140	111
Running spares	17	13
Schematic diagram	105d	86
Second rf amplifier, stage analysis	72	44
Sense amplifier, stage analysis	70	43
Signal paths	69	42
1,610-kc am if. amplifiers, alinement procedure	136	106
Standard output conditions for alinement	133	105
Technical characteristics	7d	6
Test equipment required for alinement	132	105
Theory	68–83	42–53
Troubleshooting chart	104	67
Troubleshooting data	97	63
Voltage and resistance diagram	105a	86
Receiver gain, performance test with loop antenna	163	121
Records and forms	2	3
Refinishing	128	102

	Paragraph	Page
Replacement and adjustments:		
ANT. TRIMMER capacitor	125	101
Azimuth disk	121	97
Linkage adjustments	124	101
Main tuning capacitor	123	101
Tuning mechanism	122	98
Replacement of parts:		
Antenna AS–536/PRD–1	116	95
Antenna AT–301/PRD–1	116	95
Battery Box CY–947/PRD–1	119	97
Compass	120*d*	97
Direction Finder Tripod MT–870/PRD–1	120*a*	97
Dynamotor-Power Supply DY–79/PRD–1	118	96
General procedure	115	95
Headset and cord	120*c*	97
Power and test cords	120*b*	97
Radio Receiver R–395/PRD–1	117	96
Resistances of transformer windings and coils of Radio Receiver R–395/PRD–1	106*a*	87
Running spares	17	13
Rustproofing and painting	62	37
Schematic diagrams:		
Battery Box CY–947/PRD–1	105*d*	86
Dynamotor-Power Supply DY–79/PRD–1	105*d*	86
Radio Receiver R–395/PRD–1	105*d*	86
Sectionalization and localization of components for troubleshooting	94	62
Shorts in power supply circuits:		
Battery Box CY–947/PRD–1	100	65
Dynamotor-Power Supply DY–79/PRD–1	99	64
Radio Receiver R–395/PRD–1	101	65
Signal substitution procedure for troubleshooting	107	91
Siting	20	15
Special tools for maintenance work	52	32
Special tools supplied with equipment	53	33
Stage analysis:		
Audio output amplifier	82	53
Automatic volume control	83	53
Beat-frequency oscillator	79	51
Crystal calibrator oscillator	73	45
Detector	80	51
First audio amplifier	81	52
First rf amplifier	71	43
455-kc fm if. amplifiers	76	49
455-kc fm and 1,610-kc am if. amplifiers	77	49
455-kc fm discriminator	78	50
Local oscillator	74	46
Mixer	75	48
Stage analysis—Continued		
Second rf amplifier	72	44
Sense amplifier	70	43
Stage gain charts for troubleshooting	114	94
Standard receiver setup for alinement of Radio Receiver R–395/PRD–1	134	105
Starting procedure	40	26
Stopping procedure	45	29
Table of components	9	8
Technical characteristics	7	6
Test cord:		
Description	16*d*	12
Replacement of parts	120*b*	97
Test equipment required:		
Alinement of Radio Receiver R–395/PRD–1	132	105
Troubleshooting	98	64
Theory:		
Battery Box CY–947/PRD–1	93	61
Dynamotor-Power Supply DY–79/PRD–1	92	60
Radio Receiver R–395/PRD–1	68–83	42–53
Tools and materials	52	32
Troubleshooting:		
Additional information	106	87
Chart	104	67
Component sectionalization and localization procedure	94	62
Data	97	63
Precautions	96	63
Audio frequency	108	91
Beat-frequency oscillator	110	92
Intermediate frequency:		
455-kc am if. amplifiers	109	92
455-kc fm if. amplifiers	112	93
1,610-kc am if. amplifiers	111	92
Procedures	95	62
Test equipment required	98	64
Radio frequency	113	93
Signal substitution procedure	107	91
Stage gain charts	114	94
Tube and crystal replacements	106*c*	91
Tube interchangeability	66*e*	39
Tuning mechanism, replacement and adjustment	122	98
Uncrating, unpacking and checking new equipment	21	15
Voltage and resistance diagrams:		
Battery Box CY–947/PRD–1	105*b*	86
Dynamotor-Power Supply DY–79/PRD–1	105*b*	86
Radio Receiver R–395/PRD–1	105*a*	86
Voltage and resistance measurements	105	86
Weatherproofing	61	36

[AG 413.44 (4 Oct 55)]

By order of the Secretary of the Army:

MAXWELL D. TAYLOR,
General, United States Army,
Chief of Staff.

Official:

JOHN A. KLEIN,
Major General, United States Army,
The Adjutant General.

Distribution:
Active Army:

CNGB (1)
Tec Svc, DA (1) except CSIGO (30)
Tec Svc Bd (1)
Hq CONARC (5)
CONARC Bd (Incl ea Test Sec) (1)
Army AA Comd (2)
OS Maj Comd (5)
OS Base Comd (5)
Log Comd (5)
MDW (1)
Armies (5)
Corps (2)
Tng Div (2)
Ft & Cp (2)
Gen & Br Svc Sch (5) except Sig Sch (25)
Gen Depots (2) except Atlanta Gen Depot (None)
Sig Sec, Gen Depots (10)
Sig Depots (20)
POE (2)
OS Sup Agencies (2)
Sig Fld Maint Shops (3)
Sig Lab (5)
Mil Dist (1)
Units organized under following TOE's:
11–7R, Sig Co, Inf Div (2)
11–16R, Hq & Hq Co, Sig Bn, Corps or Abn Corps (2).
11–57R, Armd Sig Co (2)
11–127R, Sig Rep Co (2)
11–128R, Sig Depot Co (2)
11–500R (AA–AE), Sig Svc Org (2)
11–557R, Abn Sig Co (2)
11–587R, Sig Base Maint Co (2)
11–592R, Hq & Hq Co, Sig Base Depot (2)
11–597R, Sig Base Depot Co (2)
32–55R, Comm Recon Bn (2)
32–56R, Hq & Hq Co, Comm Recon Bn (2)
32–57R, Comm Recon Opr Co (2)

NG: State AG (6); units—same as Active Army except allowance is one copy to each unit.
USAR: None.
For explanation of abbreviations used, see SR 320–50–1.

U. S. GOVERNMENT PRINTING OFFICE: 1955 O—363564